Broadcast Electronics
4100 North 24th Street, Quincy, Illinois 62305 USA • Phone (217) 224-9600 • Fax (217) 224-9607 • www.bdcast.com • bdcast@bdcast.com

Broadcast Electronics

AM 500A, AM 1A Transmitter

597-1112 rev C
August 29, 2011

Broadcast Electronics

AM 500A, AM 1A
Transmitter

©2011 Broadcast Electronics. All rights reserved.

The information in this publication is subject to improvement and change without notice. Although every effort is made to ensure the accuracy of the information in this manual, Broadcast Electronics accepts no responsibility for any errors or omissions. Broadcast Electronics reserves the right to modify and improve the design and specifications of the equipment in this manual without notice. Any modifications shall not adversely affect performance of the equipment so modified.

Proprietary Notice

This document contains proprietary data of Broadcast Electronics. No part of this publication may be reproduced, transmitted, transcribed, stored in a retrieval system, translated into any other language in any form or by any means, electronic or mechanical, including photocopying or recording, for any purpose, without the express written permission of Broadcast Electronics.

Trademarks

Broadcast Electronics and the BE logo are registered trademarks of Broadcast Electronics.
Marti Electronics and the Marti logo are registered trademarks of Broadcast Electronics.

All other trademarks are property of their respective owners.

Copyright

Copyright laws protect artwork depicting circuitry in this manual.
Information in this manual is subject to change without notice and does not represent a commitment on the part of Broadcast Electronics.
Broadcast Electronics may make improvements and/or changes in this manual or in the product described herein at any time.
This product could include technical inaccuracies or typographical errors.

Broadcast Electronics
Product Warranty (Two-Year Limited)

BE hereby warrants all new products manufactured by BE against any defects in material or workmanship at the time of delivery thereof, or that develop under normal use within a period of two (2) years from the date of shipment.

BE reserves the right to repair equipment under warranty with new or refurbished equipment or parts. BE's sole responsibility with respect to any equipment or parts not conforming to this warranty is to replace or repair such equipment upon the return thereof F.O.B. to BE's factory in Quincy, Illinois, U.S.A. In the event of replacement pursuant to the foregoing warranty, only the unexpired portion of the warranty from the time of the original purchase will remain in effect for any such replacement.

This warranty shall exclude the following products, component parts and/or assemblies:

(a) Transmitter power output tubes shall only carry the original manufacturer's or supplier's standard warranty in effect on their original shipment date.

(b) All computers, computer peripherals, cables, hard disk drives, etc., shall only carry the manufacturer's or supplier's standard warranty in effect on their original shipment date.

(c) "Components", defined as separate and individual parts (e.g. transistors, integrated circuits, capacitors, resistors, inductors, fans, etc), resold by BE from another manufacturer or supplier, shall only carry a 90 day warranty, effective the date of shipment. Any such 'Components' being returned for warranty claim must be (1) returned in their original packaging and (2) must be in new, unused condition.
BE is unable to process or resolve component defects or performance concerns on components that have been soldered, installed, wired or in any way altered from new their new condition.

(d) "Resale Equipment", defined as equipment purchased from another manufacturer or supplier, then resold by BE, shall only carry such manufacturer's or supplier's standard warranty in effect as of the original shipment date. All warranty claims against any and all 'resale equipment' sold by BE must be filed directly with the original equipment manufacturer. BE is unable to process or resolve equipment defects or performance concerns on products or services not manufactured by BE.

This warranty shall not extend to claims resulting from any acts of God, terrorism, war, defects or failures caused by Purchaser or user abuse or misuse, operator error, or unauthorized attempts to repair or alter the equipment in any way.

Under no circumstances shall BE be responsible for indirect, incidental or consequential damages, including, but not limited to transportation costs, non-authorized repair or service costs, downtime costs, costs for substituting equipment or loss of anticipated profits or revenue, incurred by Purchaser, whether based in contract, tort or for negligence or breach of statutory duty or otherwise.
The terms of the foregoing warranty shall be null and void if the equipment has been altered or repaired without specific written authorization from BE, or if not installed according to BE's instruction manuals, including, but not limited to, the absence of proper grounding, surge (TVSS) protection on the AC circuit panel or proper lightning protection/grounding on all output circuits, or if equipment is operated under environmental conditions or circumstances other than those specifically described in BE's product literature or instruction manual which accompany the equipment. The warranty shall be voided if the product or subassembly is equipped with a tamper seal and that tamper seal is broken. BE shall not be liable for any expense of any nature whatsoever

©2011 Broadcast Electronics

incurred by the original user without prior written consent of BE. The warranty provided herein shall terminate at the end of the period set forth above. **This warranty extends only to the original Purchaser and is not transferable.** There are no third party beneficiaries of any of the provisions of this warranty. If the equipment is described as "used" equipment, it is sold as is and where is and no warranty applies unless authorized in writing. .

EXCEPT AS SET FORTH HEREIN, AS TO TITLE AND AS SPECIFICALLY REQUIRED BY LAW, THERE ARE NO OTHER WARRANTIES, OR ANY AFFIRMATIONS OF FACT OR PROMISES BY BE, WITH REFERENCE TO THE EQUIPMENT, OR TO MERCHANTABILITY, FITNESS FOR A PARTICULAR APPLICATION, SIGNAL COVERAGE, INFRINGEMENT, OR OTHERWISE, WHICH EXTEND BEYOND THE DESCRIPTION OF THE EQUIPMENT ON THE FACE HEREOF.

©2011 Broadcast Electronics

IMPORTANT INFORMATION

EQUIPMENT LOST OR DAMAGED IN TRANSIT -

When delivering the equipment to you, the truck driver or carrier's agent will present a receipt for your signature. Do not sign it until you have:

1) Inspected the containers for visible signs of damage and 2) Counted the containers and compared with the amount shown on the shipping papers. If a shortage or evidence of damage is noted, insist that notation to that effect be made on the shipping papers before you sign them.

Further, after receiving the equipment, unpack it and inspect thoroughly for concealed damage. If concealed damage is discovered, immediately notify the carrier, confirming the notification in writing, and secure an inspection report. This item should be unpacked and inspected for damage WITHIN 15 DAYS after receipt. Claims for loss or damage will not be honored without proper notification of inspection by the carrier.

RF PRODUCT TECHNICAL ASSISTANCE, REPAIR SERVICE, PARTS -

Technical assistance is available from Broadcast Electronics by letter, prepaid telephone or E-mail. Equipment requiring repair or overhaul should be sent by common carrier, prepaid, insured, and well protected. If proper shipping materials are not available, contact the RF Technical Services Department for a shipping container. Do not mail the equipment. We can assume no liability for inbound damage, and necessary repairs become the obligation of the shipper. Prior arrangement is necessary. Contact the RF Technical Services Department for a Return Authorization.

Emergency and warranty replacement parts may be ordered from the following address. Be sure to include the equipment model number, serial number, part description, and part number. Non-emergency replacement parts may be ordered directly from the Broadcast Electronics stock room at the number shown below.

RF TECHNICAL SERVICES -

Telephone: +1 (217) 224-9617
E-Mail: rfservice@bdcast.com
Fax: +1 (217) 224-6258

FACILITY CONTACTS -

Broadcast Electronics, - Quincy Facility
4100 N. 24th St. P.O. BOX 3606
Quincy, Illinois 62305
Telephone: +1 (217) 224-9600
Fax: +1 (217) 224-6258
General E-Mail: bdcast@bdcast.com
Web Site: www.bdcast.com

PARTS -

Telephone: +1 (217) 224-9617
E-Mail: parts@bdcast.com

©2011 Broadcast Electronics

RETURN, REPAIR, AND EXCHANGES -

Do not return any merchandise without our written approval and Return Authorization. We will provide special shipping instructions and a code number that will assure proper handling and prompt issuance of credit. Please furnish complete details as to circumstances and reasons when requesting return of merchandise. All returned merchandise must be sent freight prepaid and properly insured by the customer.

MODIFICATIONS -

Broadcast Electronics, reserves the right to modify the design and specifications of the equipment in this manual without notice. Any modifications shall not adversely affect performance of the equipment so modified.

©2011 Broadcast Electronics

SAFETY PRECAUTIONS

PLEASE READ AND OBSERVE ALL SAFETY PRECAUTIONS//

ALL PERSONS WHO WORK WITH OR ARE EXPOSED TO POWER TUBES, POWER TRANSISTORS, OR EQUIPMENT WHICH UTILIZES SUCH DEVICES MUST TAKE PRECAUTIONS TO PROTECT THEMSELVES AGAINST POSSIBLE SERIOUS BODILY INJURY. EXERCISE EXTREME CARE AROUND SUCH PRODUCTS. UNINFORMED OR CARELESS OPERATION OF THESE DEVICES CAN RESULT IN POOR PERFORMANCE, DAMAGE TO THE DEVICE OR PROPERTY, SERIOUS BODILY INJURY, AND POSSIBLY DEATH.

DANGEROUS HAZARDS EXIST IN THE OPERATION OF POWER TUBES AND POWER TRANSISTORS -

The operation of power tubes and power transistors involves one or more of the following hazards, any one of which, in the absence of safe operating practices and precautions, could result in serious harm to personnel.

A. **HIGH VOLTAGE -** Normal operating voltages can be deadly. Additional information follows.

B. **RF RADIATION -** Exposure to RF radiation may cause serious bodily injury possibly resulting in Blindness or death. Cardiac pacemakers may be affected. Additional information follows.

C. **HOT SURFACES** Surfaces of air-cooled radiators and other parts of tubes can reach temperatures of several hundred degrees centigrade and cause serious burns if touched. Additional information follows.

D. **RF BURNS** Circuit boards with RF power transistors contain high RF potentials. Do not operate an RF power module with the cover removed.

©2011 Broadcast Electronics

HIGH VOLTAGE –

Many power circuits operate at voltages high enough to kill through electrocution. Personnel should always break the primary AC Power when accessing the inside of the transmitter.

RADIO FREQUENCY RADIATION

Exposure of personnel to RF radiation should be minimized, personnel should not be permitted in the vicinity of open energized RF generating circuits, or RF transmission systems (waveguides, cables, connectors, etc.), or energized antennas. It is generally accepted that exposure to "high levels" of radiation can result in severe bodily injury including blindness. Cardiac pacemakers may be affected.

The effect of prolonged exposure to "low level" RF radiation continues to be a subject of investigation and controversy. It is generally agreed that prolonged exposure of personnel to RF radiation should be limited to an absolute minimum. It is also generally agreed that exposure should be reduced in working areas where personnel heat load is above normal. A 10 mW/cm^2 per one tenth hour average level has been adopted by several U.S. Government agencies including the Occupational Safety and Health Administration (OSHA) as the standard protection guide for employee work environments. An even stricter standard is recommended by the American National Standards Institute which recommends a 1.0 mW/cm^2 per one tenth hour average level exposure between 30 Hz and 300 MHz as the standard employee protection guide (ANSI C95.1-1982).

RF energy must be contained properly by shielding and transmission lines. All input and output RF connections, such as cables, flanges and gaskets must be RF leak proof. Never operate a power tube without a properly matched RF energy absorbing load attached. Never look into or expose any part of the body to an antenna or open RF generating tube or circuit or RF transmission system while energized. Monitor the tube and RF system for RF radiation leakage at regular intervals and after servicing.

HOT SURFACES –

The power components in the transmitter are cooled by forced-air and natural convection. When handling any components of the transmitter after it has been in operation, caution must always be taken to ensure that the component is cool enough to handle without injury.

©2011 Broadcast Electronics

Table of Contents

1 AM 500A, AM 1A Transmitter 1
1.1 INTRODUCTION. 1
1.2 EQUIPMENT DESCRIPTION. 1
1.2.1 Exciter/Controller Unit 1
1.2.2 Stereo Circuit Board (optional) 1
1.2.3 Exciter Circuit Board 2
1.2.4 Controller Circuit Board 2
1.2.5 Output Network Chassis 2
1.3 TRANSMITTER CONFIGURATIONS. 4
1.4 ACCESSORIES AND SPARE PARTS KITS. 4
1.5 EQUIPMENT SPECIFICATIONS. 5
2 Installation 10
2.1 UNPACKING. 10
2.2 ENVIRONMENTAL REQUIREMENTS. 10
2.3 PHYSICAL INSTALLATION. 10
2.3.1 Equipment Placement 10
2.3.2 Rack Preparation 10
2.4 EQUIPMENT INSTALLATION. 11
2.4.1 Transmitter Mounting 11
2.4.2 ECU Cables 11
2.5 Component Installation 14
2.5.1 ECU CIRCUIT BOARDS. 14
2.5.2 RF POWER MODULE 15
2.5.3 BATTERY INSTALLATION. 15
2.6 CIRCUIT BOARD PROGRAMMING. 15
2.6.1 EXCITER CIRCUIT BOARD. 16
2.6.2 STEREO CIRCUIT BOARD. 18
2.6.3 CONTROLLER CIRCUIT BOARD. 19
2.6.4 POWER SUPPLY CIRCUIT BOARD. 21
2.6.5 Modulator CIRCUIT BOARD 21
2.6.6 Remote Control Connections 21
2.6.7 Wiring 25
2.6.8 Transmitter Site Lightning Protection System Checkout 29
2.6.9 Transmission Line And Antenna Checkout 32
2.6.10 Initial Checkout 33
2.6.11 Preliminary Operation And Adjustment 33
2.6.12 Power Level And Modulation Monitor Calibration Adjustments 34
3 Operation 40
3.1 CONTROLS AND INDICATORS. 40

©2011 Broadcast Electronics

3.2 TURN ON. 45
3.3 TURN OFF. 46
3.4 METERING. 46
3.4.1 Forward Power 46
3.4.2 Reflected Power 46
3.4.3 Power Adjust 46
3.4.4 Mono/Stereo Operation 46
3.4.5 Pilot Control 47
3.4.6 Exciter Monitor Operation 47
3.4.7 Fault Reset 48
3.4.8 Power Supply Fault Reset 48
3.4.9 Over-Cycle Off 48
3.4.10 Over-Modulation PWM Mute 48
3.4.11 Transmitter Monitor 49
3.4.12 Battery Test 49
3.4.13 Controller PWM Mute Indicator 49
3.4.14 Controller Remote Failsafe Indicator 49
3.4.15 Exciter Lock Indicator 49
3.4.16 Exciter +5v/+15v/-15v Indicators 49
3.4.17 Stereo Equalization Indicators 49
3.4.18 RF Power Module Indicators 49
3.4.19 High AC Line Conditions 50
4 Block Diagrams 51
4.1 OVERALL BLOCK DIAGRAM. 51
4.2 POWER SUPPLY CIRCUITRY OPERATION. 51
4.3 POWER SUPPLY CIRCUIT BOARD OPERATION. 51
4.4 RF CIRCUITRY OPERATION. 51
4.5 RF POWER MODULE MODULATOR CIRCUIT BOARD OPERATION. 51
4.6 RF POWER MODULE AMPLIFIER CIRCUIT BOARD OPERATION. 51
4.7 CONTROLLER CIRCUIT BOARD OPERATION. 51
4.8 EXCITER CIRCUIT BOARD OPERATION. 52
4.9 STEREO CIRCUIT BOARD OPERATION. 52
5 Maintenance 53
5.1 SAFETY CONSIDERATIONS. 53
5.2 FIRST LEVEL MAINTENANCE. 53
5.3 ROUTINE MAINTENANCE. 54
5.4 SECOND LEVEL MAINTENANCE. 54
5.5 OVERALL TRANSMITTER ELECTRICAL ADJUSTMENTS. 55
5.6 TROUBLESHOOTING. 55
5.7 POWER SUPPLY CIRCUIT BOARD. 62
5.8 RF POWER MODULE. 67
5.9 DIRECTIONAL COUPLER/LIGHTNING DETECTION/LIGHTNING PROTECTION CIRCUIT BOARDS. 70
5.10 ECU. 72
5.11 CONTROLLER CIRCUIT BOARD ADJUSTMENTS. 74

©2011 Broadcast Electronics

5.12 STEREO CIRCUIT BOARD ADJUSTMENTS. 74
5.13 DISPLAY CIRCUIT BOARD ADJUSTMENTS. 77
5.14 AM MATCHING NETWORK. 82
6 Parts List 83
6.1 AM 500A, AM-1A 83
6.2 FREQUENCY KITS 132

©2011 Broadcast Electronics

©2011 Broadcast Electronics

1 AM 500A, AM 1A Transmitter

1.1 INTRODUCTION.

Information presented by this section provides a general description of the Broadcast Electronics AM-1A/AM-500A transmitters and lists equipment specifications.

1.2 EQUIPMENT DESCRIPTION.

The AM-1A transmitter is a 1 kW solid-state AM transmitter designed for continuous operation in the 522 kHz to 1705 kHz broadcast band (refer to Figure 1-1). The AM-500A transmitter is a 500 Watt solid-state stereo AM transmitter designed for continuous operation in the 522 kHz to 1705 kHz broadcast band. The transmitters consist of modular components assembled in two individual units. The exciter/control unit chassis (ECU) contains: 1) the exciter circuit board, 2) the controller circuit board, 3) the stereo circuit board, and 4) the controller switch and display circuit board. The output network chassis contains a: 1) power amplifier module, 2) power supply module, 3) bandpass filter assembly, 4) directional coupler circuit board, 5) lightning protection circuit board, and 6) lightning detection circuit board. Specific transmitter features include:

1. Optional built-in C-QUAM™ AM stereo circuitry.
2. A high efficiency Class E solid-state RF power amplifier module.
3. A high efficiency switching power supply.
4. A CMOS digital controller with extensive VSWR detection and foldback circuitry which reduces carrier interruptions caused by weather disturbances.

1.2.1 Exciter/Controller Unit

The transmitter exciter/control unit (ECU) is a modular assembly containing plug-in stereo, exciter, and controller circuit boards. In addition to the circuit boards, the ECU is equipped with forward and reflected power meters to provide transmitter output power status indications.

1.2.2 Stereo Circuit Board (optional)

The ECU stereo circuit board is a modular plug-in assembly containing C-QUAM™ AM stereo circuitry. The optional C-QUAM™ stereo system is a mode of AM stereo transmission utilizing amplitude modulated monaural (L+R) information and independently quadrature modulated stereo (L-R) information. The results produce a stereo transmission system compatible with mono receivers.

The stereo circuit board is designed with remote/local controlled mono left, mono right, mono L+R, and stereo modes of operation. Two equalization circuits are provided to allow the transmitter to be configured for operation into two different antennas.

C-QUAM™ is a registered trademark of Motorola Inc.

©2011 Broadcast Electronics

AM-1A TRANSMITTER

597-1112-1

COPYRIGHT © 1996 BROADCAST ELECTRONICS.

Figure 1-1. AM-1A Transmitter

1.2.3 Exciter Circuit Board

The ECU exciter circuit board is a modular plug-in exciter assembly. Instrumentation amplifiers provide balanced left and right channel transformerless audio inputs. The exciter carrier frequency is established by a digital frequency synthesizer. The synthesizer is a phase-locked-loop circuit which provides extremely accurate and reliable carrier frequency operation. A PWM (pulse-width-modulation) circuit is used to generate an RF drive signal for application to a modulator circuit board in an RF power module. If a stereo circuit board failure is encountered or when the stereo circuit board is removed from the ECU chassis, the exciter circuitry is designed to automatically configure to monophonic operation.

1.2.4 Controller Circuit Board

All transmitter control operations are directed by the ECU controller circuit board. The controller circuit board consists of CMOS logic control and monitoring circuitry. The circuitry is designed to interface to all popular remote control systems.

The transmitter power is controlled by a power control circuit. The circuit allows the transmitter to be operated at five power levels. A power trim circuit allows the transmitter output power to be adjusted to a precise level. An antenna interlock circuit is provided to prevent the transmitter from operating into an incorrect antenna. A reflected power detection circuit operates in association with the power control circuit to foldback the transmitter power during high VSWR conditions. In addition to the reflected power detector, a lightning detector circuit is provided to mute the transmitter when high voltage is present at the transmitter output during a lightning storm.

1.2.5 Output Network Chassis

The output network chassis contains: 1) a bandpass filter, 2) an RF power module, 3) a power supply circuit board, 4) a lightning detection circuit board, 5) a lightning protection circuit board, and 6) a

directional coupler assembly.

1. Bandpass Filter

The bandpass filter is provided to attenuate all harmonic frequencies to FCC, DOC, and CCIR levels.

2. RF Power Module

Each transmitter is equipped with a single RF power module. The power module is a modular plug-in assembly containing two RF power amplifier circuit boards and one modulator circuit board. The AM-1A power module will produce 1100 watts of RF power. The AM-500A power module will produce 550 watts of RF power.

The RF power module is designed using Class E amplifier technology. A Class E amplifier exhibits high efficiency and provides superior audio performance. In addition to the superior efficiency and audio performance, the power module is designed to be removed from the chassis for maintenance.

3. Power Supply

A modular switching power supply provides dc operating potentials for the transmitter. The power supply design uses an SCR controlled bridge to rectify the ac line voltage into a dc potential. The supply is filtered and routed to the RF power module for control and regulation. A fault detection circuit monitors power supply activity for failure conditions. A separate modular switching power supply provides operating potentials for the ECU circuitry.

©2011 Broadcast Electronics

1.3 TRANSMITTER CONFIGURATIONS.

The transmitters can be ordered in the following configurations:

P/N	DESCRIPTION
907-1000-001	AM-1A 1 kW AM Transmitter for operation in the 522 kHz to 1705 kHz broadcast band, 196V - 252V ac 50/60 Hz single phase supply.
907-0500-001	AM-500A 500W AM Transmitter for operation in the 522 kHz to 1705 kHz broadcast band, 196V -252V ac 50/60 Hz single phase supply.

1.4 ACCESSORIES AND SPARE PARTS KITS.

The following text presents accessories and spare parts kits available for use with the AM-1A/AM-500A transmitters.

P/N	DESCRIPTION
977-0027	Recommended semiconductor kit.
977-0028	100% semiconductor kit.
977-0029	Recommended spare parts kit. Includes selected meters, switches, fuses, filters, etc. Does not include semiconductors.
977-0037	Basic semiconductor kit for AM-A series, AM-1A, AM-6A, AM-10A.

©2011 Broadcast Electronics

1.5 EQUIPMENT SPECIFICATIONS.

Refer to Table 1-1 for electrical specifications or Table 1-2 for physical specifications of the AM-1A/AM-500A transmitter.

TABLE 1-1. ELECTRICAL CHARACTERISTICS
(Sheet 1 of 3)

PARAMETER	SPECIFICATION
RF POWER OUTPUT	
AM-1A	5 watts to 1100 watts. Five preset power levels available by local or remote control.
AM-500A	5 watts to 550 watts. Five preset power levels available by local or remote control.
RF CARRIER FREQUENCY RANGE	522 kHz to 1705 kHz (as ordered). Accommodates 9 kHz or 10 kHz channel spacing (9 kHz spacing requires an optional crystal).
RF OUTPUT IMPEDANCE	50 Ohms, unbalanced.
OUTPUT CONNECTOR	Type N Connector.
LOAD VSWR	1.30 : 1 at full carrier power. Will operate into a higher VSWR with automatic power reduction. Open and short circuit protected. Load VSWRs higher than 1.30 : 1 are accommodated with an optional matching network.
HARMONIC AND SPURIOUS SUPPRESSION	Meets or exceeds FCC, DOC, and CCIR requirements when preceded by external NRSC-1 compatible audio low-pass filters.
CARRIER FREQUENCY STABILITY	±3ppm, 0° to 50° C (+32° to +122° F).
CARRIER SHIFT	Less than 1% at 95% negative modulation at 1 kHz.
TYPE OF MODULATION	Pulse Width Modulation of L+R envelope with optional integrated C-QUAM AM stereo. An RF input connector is also provided for an external stereo exciter.
OPERATING MODES	Mono L+R. With optional stereo card: Stereo, mono L, mono R, by local or remote control.
MODULATION CAPABILITY	
AM-1A	Greater than 145% peak positive capability at 1100 watts. 130% into a 1.5 : 1 VSWR.
AM-500A	Greater than 145% peak positive capability at 500 watts. 130% into a 1.3 : 1 VSWR.

©2011 Broadcast Electronics

MODULATION INPUT INDICATION	Peak reading, color coded, LED bar graph display with an autorange feature for monitoring positive or negative input levels of four different audio channels (L/R or L+R/L-R).
AUDIO INPUT LEVEL	+10 dBm, ±dB, L+R (or mono) to produce 100% L+R envelope modulation. Other input levels can be accommodated.
AUDIO INPUT IMPEDANCE	600 Ohms. Inputs are balanced, transformerless, and resistive with passive RFI filtering. Other impedances can be accommodated.
AUDIO FREQUENCY RESPONSE (MONOPHONIC)	
AM-1A	±0.5 dB, 20 Hz to 10 kHz at 90% negative modulation (linear phase mode). +0.1 dB -3 dB, 20 Hz to 10 kHz at 90% negative modulation, standard configuration. 90% negative modulation referenced at 1 kHz (9 dBm).
AM-500A	±1.0 dB, 20 Hz to 10 kHz at 90% negative modulation (linear phase mode). +0.1 dB -3 dB, 20 Hz to 10 kHz at 90% negative modulation, standard configuration. 90% negative modulation referenced at 1 kHz (9 dBm).
AUDIO HARMONIC DISTORTION	
AM-1A Mono	Less than 0.8%, 20 Hz to 10 kHz at 1 kW. Less than 1.5%, 20 Hz to 10 kHz at 500 W. Less than 2.0%, 20 Hz to 10 kHz at 250 W. Less than 3.0%, 20 Hz to 10 kHz at 100 W. The mono audio harmonic distortion specifications are referenced to an audio input level which generates 90% modulation at 1 kHz (9 dBm).
AM-1A Stereo	Less than 1.5% at 50% single channel modulation, 50 Hz to 10 kHz at rated power.
AM-500A Mono	Less than 1.2%, 20 Hz to 10 kHz at 500 Watts. The mono audio harmonic distortion specifications are referenced to an audio input level which generates 90% modulation at 1 kHz (9 dBm).
AM-500A Stereo	Less than 2.0% at 50% single channel modulation, 50 Hz to 10 kHz at rated power.
INTERMODULATION DISTORTION (MONO)	1.2% or less at 1:1 ratio. 1.7% or less at 4:1 ratio. 60/7000 Hz SMPTE standards with 85% modulation at rated power.
CCIF INTERMODULATION DISTORTION (MONO)	1.0% or less at 1:1 ratio. 4 kHz/5 kHz with 85% modulation at rated power.
TRANSIENT INTERMODULATION DISTORTION (MONO)	1.0% or less at 4:1 ratio. 2.96 kHz square wave 8 kHz sinewave with 85% modulation at rated power.
INCIDENTAL PHASE MODULATION (STEREOPHONIC)	30 dB below equivalent 100% L-R C-QUAM modulation 50 Hz

©2011 Broadcast Electronics

	to 10 kHz at rated power. Measured with an audio input level which generates 95% negative L+R envelope modulation at 1 kHz (9.5 dBm).
STEREO SEPARATION	
AM-1A	-30 dB or greater, 50 Hz to 10 kHz. Measured with 50% single channel modulation into a 50 ohm resistive load at rated power.
AM-500A	-25 dB or greater, 50 Hz to 10 kHz. Measured with 50% single channel modulation into a 50 ohm resistive load at rated power.
SQUAREWAVE OVERSHOOT	
Mono	0.1% or less at 400 Hz, 90% modulation with high frequency boost disabled.
Stereo	1% or less at 400 Hz, 50% single channel modulation with high frequency boost disabled.
SQUAREWAVE TILT	Less than 1% at 40 Hz. Less than 1.5% at 20 Hz. Measured with 90% negative modulation.
NOISE	
Mono	Greater than 65 dB below a reference level equivalent to 100% negative modulation in a 22 Hz to 30 kHz bandwidth, unweighed.
Stereo	Greater than 55 dB below a reference level equivalent to 100% negative modulation of either left or right channel in a 22 Hz to 30 kHz bandwidth, unweighed.
AC INPUT VOLTAGE	196V to 252V AC, 50/60 Hz, single phase. Includes built-in MOVs for surge suppression.
AC POWER CONSUMPTION	
AM-1A	1.37 kW, no modulation of 1 kW carrier. 2.05 kW, 100% sinusoidal modulation of 1 kW carrier. Measured at 1 kW into a 50 Ohm resistive load at 220 VAC.
AM-500A	830 watts, no modulation of 500 watt carrier. 1.25 kW, 100% sinusoidal modulation of 500 Watt carrier. Measured at 500 watts into a 50 Ohm resistive load at 220VAC.

©2011 Broadcast Electronics

TABLE 1-2. PHYSICAL AND ENVIRONMENTAL CHARACTERISTICS
(Sheet 1 of 2)

PARAMETER	SPECIFICATION
OVERALL EFFICIENCY	
AM-1A	73% or greater, 100% sinusoidal modulation of carrier, AC line to RF output. Measured at 1 kW into a 50 Ohm resistive load at 220VAC.
AM-500A	60% or greater, 100% sinusoidal modulation of carrier, AC line to RF output. Measured at 500 Watts into a 50 Ohm resistive load at 220VAC.
SAFETY	Meets IEC 215 specifications.
OUTPUT POWER	Less than 1% change in output power with variation of AC line voltage from 196-252 volts.
METERING	
AM-1A	Output Forward Power: 1) High scale – 0 to 1200 watts and 2) Low scale – 0 to 300 watts. Output Reflected Power: 1) High scale – 0 to 120 watts and 2) Low scale – 0 to 30 watts. AC Line Voltage: Scale – 150 to 300 volts. AM-1A forward power meter complies with FCC rule 73.1215 (a) within the 60 watt to 1100 watt range.
AM-500A	Output Forward Power: 1) High scale – 0 to 600 watts and 2) Low scale – 0 to 150 watts. Output Reflected Power: 1) High scale – 0 to 60 watts and 2) Low scale – 0 to 12 watts. AC Line Voltage: Scale – 150 to 300 volts. AM-500A forward power meter complies with FCC rule 73.1215 (a) within the 30 watt to 500 watt range.
RF MONITORING PROVISIONS	2 volts RMS nominal RF output sample into a 50 Ohm input. Adjustable from the output network chassis rear panel for each of the five preset power levels.
REMOTE INTERFACE	Built-in interface for most control and monitoring systems.
PHYSICAL	
DIMENSIONS	
ECU Chassis	Width: 19.0 Inches (48.3 cm) Height: 10.5 Inches (26.7 cm) Depth: 14.4 Inches (36.6 cm)
Output Network Chassis	Width: 19.0 Inches (48.3 cm) Height: 14 Inches (35.6 cm) Depth: 27.1 Inches (68.8 cm)
WEIGHT	90.6 Pounds (41.1 kg), unpacked
CUBAGE	7.3 Ft^3 (0.21 m^3)

©2011 Broadcast Electronics

PARAMETER	SPECIFICATION
ENVIRONMENTAL COOLING	Low velocity air with cleanable filters. 250 Cubic Feet per Minute (7.08 m^3/min).
OPERATING TEMPERATURE	0˚ to 50˚ C (+32˚ to 122˚ F)
OPERATING HUMIDITY	0 TO 95% (non-condensing)
MAXIMUM ALTITUDE	
60 Hz Models	0 to 10,000 feet above sea level (0 to 3048 Meters)
50 Hz Models	0 to 7,500 feet above sea level (0 to 2286 Meters)

NOTE: AM-500A – All specifications measured at 500 watts into a 50 ohm resistive load using Broadcast Electronics AS-10 modulation monitor.

AM-1A – All specifications measured at 1100 watts into a 50 ohm resistive load using Broadcast electronics AS-10 modulation monitor.

©2011 Broadcast Electronics

2 Installation

This section contains information required for the installation and preliminary checkout of the Broadcast Electronics AM-1A/AM-500A transmitters.

2.1 UNPACKING.

The equipment becomes the property of the customer when the equipment is delivered to the carrier. Carefully unpack the transmitter. Perform a visual inspection to determine that no apparent damage has been incurred during shipment. All shipping materials should be retained until it is determined that the unit has not been damaged. Claims for damaged equipment must be promptly filed with the carrier or the carrier may not accept the claim.

The contents of the shipment should be as indicated on the packing list. If the contents are incomplete, or if the unit is damaged electrically or mechanically, notify both the carrier and Broadcast Electronics.

2.2 ENVIRONMENTAL REQUIREMENTS.

Table 1-2 provides environmental conditions which must be considered prior to transmitter installation. Refer to Table 1-2 in SECTION I, INTRODUCTION and ensure the transmitter is to be installed in an acceptable environment.

2.3 PHYSICAL INSTALLATION.

Each transmitter is wired, operated, tested, and inspected at the factory prior to shipment and is ready for installation when received. Prior to installation, this publication should be studied to obtain an understanding of the operation, circuitry, nomenclature, and installation requirements. Installation is accomplished as follows: 1) placement, 2) component installation, 3) circuit board programming, 4) remote control connections, 5) wiring, 6) transmitter site lightning protection system checkout, 7) initial checkout, and 8) preliminary operation and adjustment.

2.3.1 Equipment Placement

The AM-1A/AM-500A transmitter is designed for placement in a 19 inch EIA rack assembly (refer to Figure 2-1). The transmitter requires approximately 24.5 inches (62.2 cm) of a universal or military EIA rack (refer to Figure 2-2). To install the transmitter in a rack, refer to Figure 2-2 and perform the following procedures.

2.3.2 Rack Preparation

The transmitter can be mounted in any universal or military rack assembly. Refer to Figure 2-2 and determine type of rack for transmitter installation. A universal rack is identified by the location of mounting holes at regular rack spacings. A military rack is identified by a missing mounting hole at regular rack spacings. Each type of rack may be equipped with untapped or tapped mounting holes. To prepare the rack for the transmitter, refer to Figure 2-2 and perform the following procedure.

Prepare a universal or military rack for transmitter installation as follows:

1. Refer to Figure 2-2 and locate the transmitter mounting holes on the rack assembly. Ensure the top of the transmitter is located at the beginning of a rack unit.
2. Evaluate the rack and determine if the rack is equipped with tapped or untapped mounting holes.

©2011 Broadcast Electronics

3. Prepare the rack for installation as follows:
   A. For racks with tapped holes, mark the transmitter mounting hole locations.
   B. For racks with untapped holes, locate the transmitter clip-nuts in the transmitter accessory kit. Refer to Figure 2-2 and install the clip-nuts in each transmitter mounting hole location.

WARNING ENSURE NO PRIMARY POWER IS CONNECTED TO THE TRANSMITTER
WARNING BEFORE PROCEEDING.

2.4 EQUIPMENT INSTALLATION.

2.4.1 Transmitter Mounting

Once the transmitter rack is prepared, refer to Figure 2-2 and mount the transmitter in the rack by performing the following procedures.

The transmitter accessory kit contains #10 x 3/4 and #12 x 3/4 mounting hardware. The type of hardware used to install the transmitter is determined by the rack assembly. Refer to Figure 2-2 and determine the mounting hardware required to mount the transmitter in the rack.

Install the ECU chassis and the output network chassis in rack as follows:

1. Insert the ECU chassis in the rack and install the appropriate hardware in two mounting locations to secure the chassis in the rack.

WARNING ENSURE NO PRIMARY POWER IS CONNECTED TO THE TRANSMITTER
WARNING BEFORE PROCEEDING.

2. Install the ground straps between the ECU and the output network chassis as shown. The straps are to be placed just in front of the rack P-rail and secured using the front panel mounting hardware.
3. Insert the output network chassis in the rack and install the appropriate hardware in two mounting locations to secure the chassis in the rack.
4. Using the appropriate hardware, install the remaining hardware to secure the chassis units in the rack.

2.4.2 ECU Cables

Connect the ECU control cables as follows:

A. Attach connector J4 to P4 on the ECU chassis.

B. Attach connector J5 to P5 on the ECU chassis.

C. Attach connector J501 to P501 on the meter circuit board.

©2011 Broadcast Electronics

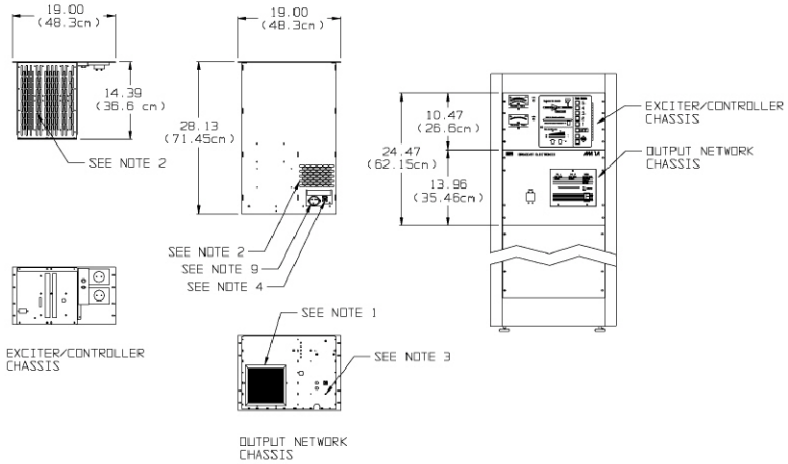

NOTES:

1. AIR INLET AT REAR OF OUTPUT NETWORK CHASSIS.
   250 CFM (7.08 M^3/MIN)

2. AIR OUTLET:
   A. EXCITER/CONTROLLER CHASSIS, 9.5" x 14",(24.1cm x 35.6cm)
   B. OUTPUT NETWORK CHASSIS, 6.5" x 4.0",(16.5cm x 10.2cm)

3. GROUND LUG.

4. OUTPUT RF CONNECTION IS TYPE "N".

5. HEAT DISSIPATION:
   AM-1A 850 WATTS MAXIMUM (2900 BTU/HR) FOR 1.1 KW RF OUTPUT @ 125% AUDIO TONE MODULATION.
   AM-500A 600 WATTS MAXIMUM (2000 BTU/HR) FOR 500 W RF OUTPUT @ 125% AUDIO TONE MODULATION.

6. WEIGHT:
   90.6 LBS (41.1 KGS) UNPACKED.

7. PACKED CUBAGE: DOMESTIC 7.3 FT^3 (0.21 m^3)
   INTERNATIONAL 20.2 FT^3 (0.57 m^3)

8. AC POWER CONSUMPTION:
   AM-1A 2.05 KW AT 100% SINUSOIDAL MODULATION OF A 1 KW CARRIER.
   AM-500A 1.25 KW AT 100% SINUSOIDAL MODULATION OF A 500 WATT CARRIER.

9. AC POWER INPUT: AM-1A - 196-252 VAC SINGLE PHASE AT 18.0 AMPS MAXIMUM, 50/60 Hz. FUSED DISCONNECT SWITCH RECOMMENDED. FOR PROPER SIZING OF FUSES, REFER TO INSTRUCTION MANUAL AND NATIONAL ELECTRICAL CODE OR LOCAL CODES.
   AM-500A - 196-252 VAC SINGLE PHASE AT 9.5 AMPS MAXIMUM, 50/60 Hz. FUSE DISCONNECT SWITCH RECOMMENDED. FOR PROPER SIZING OF FUSES, REFER TO INSTRUCTION MANUAL AND NATIONAL ELECTRICAL CODE OR LOCAL CODES.

10. PRIMARY FUSE DISCONNECT:
    FUSE SIZE: 20A
    WIRE SIZE: #12 COPPER THHN OR EQUAL

11. AM-1A SHOWN. AM-500A IS IDENTICAL.

COPYRIGHT © 1996 BROADCAST ELECTRONICS, INC

597-1112-2

Figure 2-1. AM-1A/AM-500A Transmitter Installation

©2011 Broadcast Electronics

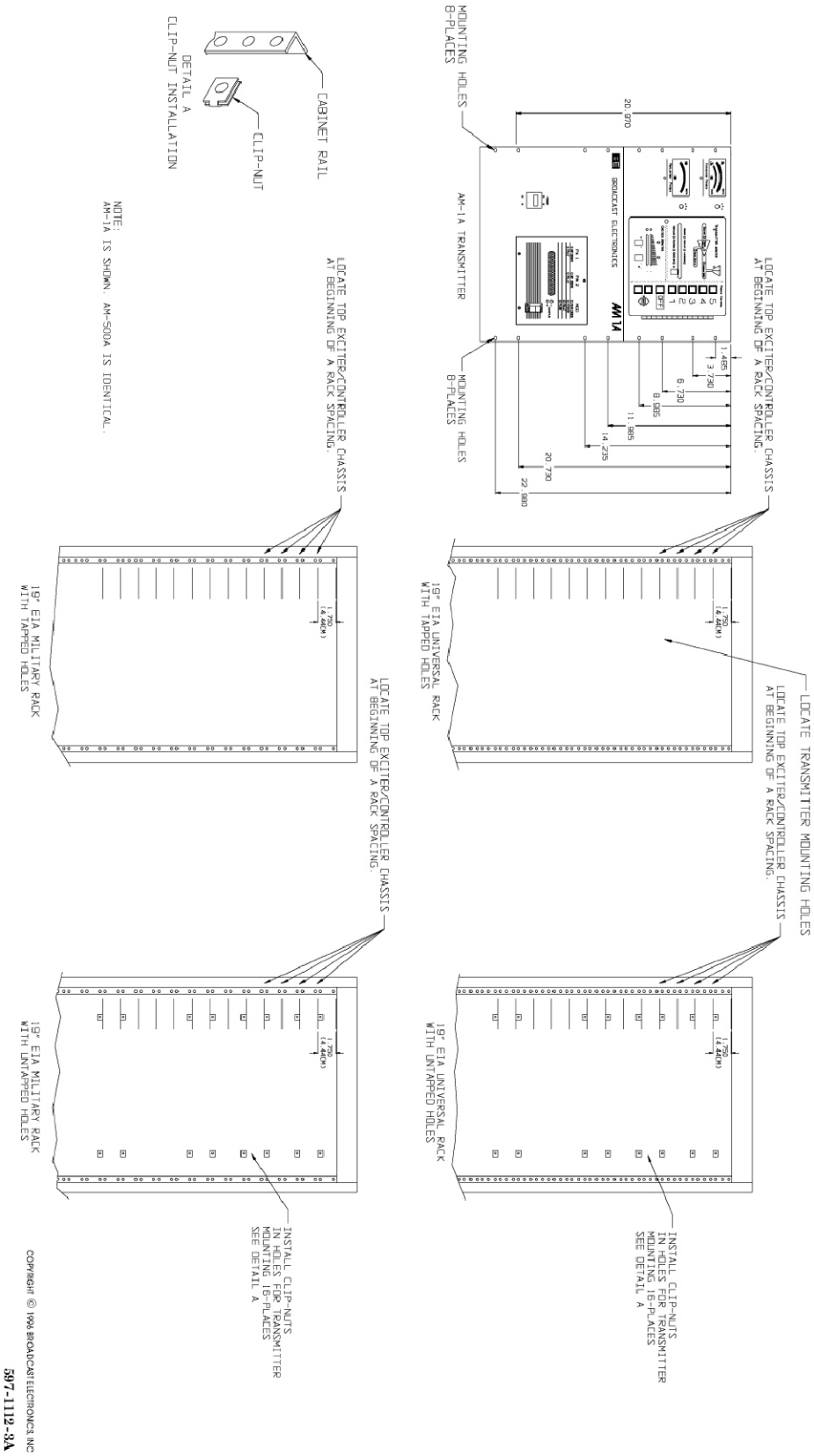

Figure 2-2 sheet 1/2. AM-1A/AM-500A Rack Installation

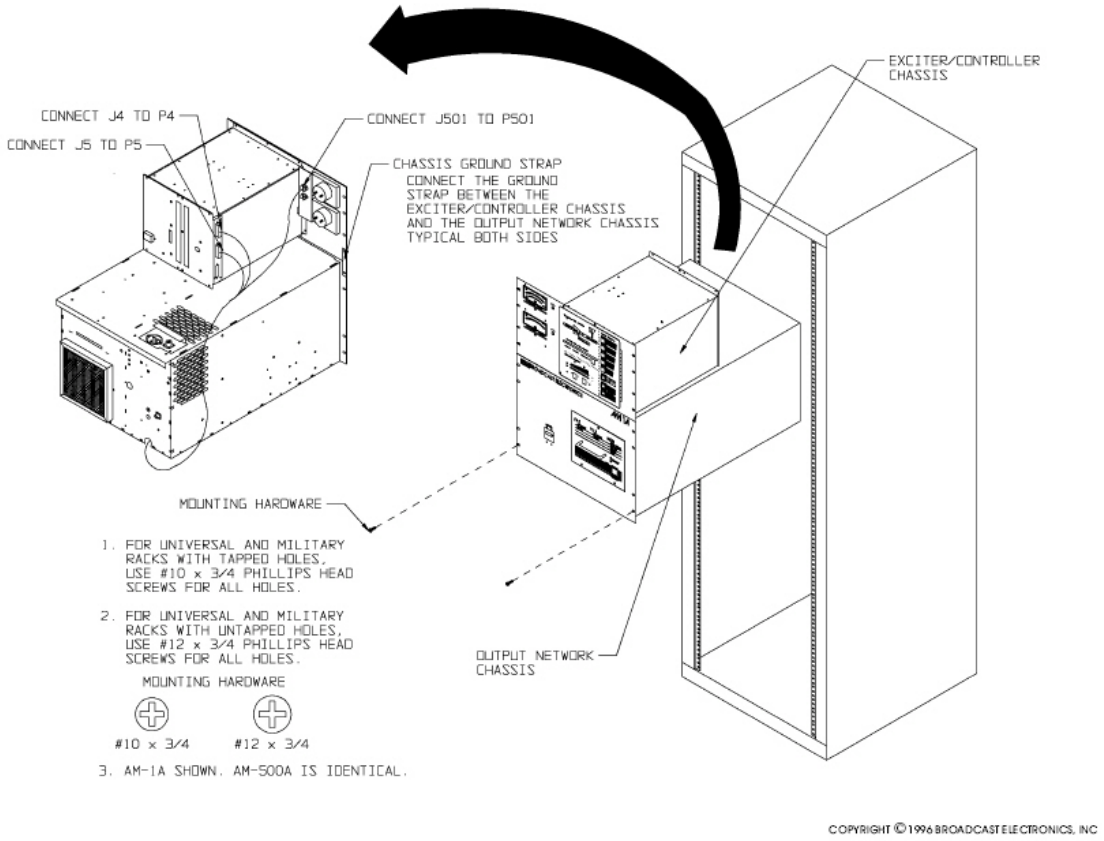

597-1112-3B

FIGURE 2-2. AM-1A/AM-500A RACK INSTALLATION (SHEET 2 OF 2)

2.5 Component Installation

WARNING ENSURE NO PRIMARY POWER IS CONNECTED TO THE TRANSMITTER BEFORE PROCEEDING.

WARNING

Selected transmitter components have been removed to prevent damage during shipment. The components removed from the transmitter are shipped in separate containers.

Remove all tape, wire ties, string, and packing material used for shipment. In addition, locate the component containers. To install the components, perform the following procedures.

2.5.1 ECU CIRCUIT BOARDS.

The ECU circuit boards are removed for shipment. Locate the shipping container with the ECU circuit boards. To re-install the circuit boards, proceed as follows:

CAUTION THE TRANSMITTER MAY BE DAMAGED IF THE ECU CIRCUIT BOARDS ARE NOT

CAUTION SECURELY SEATED INTO THE CONNECTORS.

©2011 Broadcast Electronics

1. Refer to Figure 2-3 to determine the circuit board location.
2. Insert the circuit board in the appropriate location.
3. Firmly press the circuit board into the connector to engage the connector housing.
4. Firmly press the circuit board into the connector again to engage the connector pins.
5. Repeat the procedure for each ECU circuit board.

CAUTION REMOVING OR INSTALLING THE RF POWER MODULE WITH THE TRANSMITTER ENERGIZED
CAUTION MAY RESULT IN DAMAGE TO THE MODULE.

2.5.2 RF POWER MODULE.

The RF power module is removed for shipment. Locate the RF power module shipping container. Refer to Figure 2-3 and re-install the module.

2.5.3 BATTERY INSTALLATION.

The ECU is equipped with a battery system. Refer to Figure 2-3 and install the battery in the battery receptacle.

2.6 CIRCUIT BOARD PROGRAMMING.

The AM-1A/AM-500A transmitters are designed with programmable transmitter operating characteristics. The operating characteristics are determined by the programmable circuitry on the ECU circuit boards. Refer to the following text and program the circuitry for the desired operating characteristics.

©2011 Broadcast Electronics

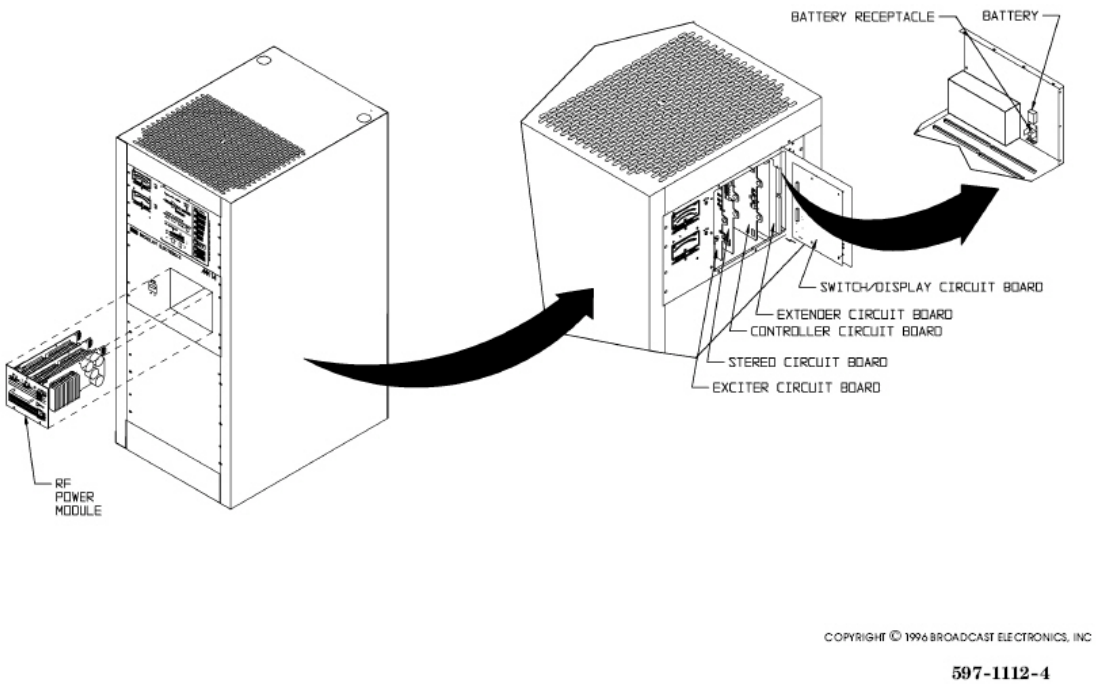

Figure 2-3 Component Installation

2.6.1 EXCITER CIRCUIT BOARD.

Exciter circuit board programming is presented in Figure 2-4. Refer to Figure 2-4 and program the circuit board as required.

- External Stereo Generator Select. Programmable header J7 programs the circuitry if: 1) an external stereo generator is to be used with the transmitter or 2) the internal stereo circuit board is to be used with the transmitter. The transmitter is shipped with the circuit programmed for internal stereo circuit board operation.

- Carrier Frequency Programming. Eight position switch S2 programs the exciter carrier frequency. The switch is programmed for the station frequency at the factory. Refer to the factory test data sheets to check the programming of the switch. If the switch programming is not identical to programming recorded in the factory test data sheets, contact the Broadcast Electronics Customer Service Department.
- PWM Frequency Programming. Four position switch S1 programs the PWM frequency. Refer to the factory test data sheets to check the programming of the switch.
- Frequency Synthesizer Programming. Programmable header J6 determines the frequency synthesizer band of operation. Refer to the factory test data sheets to check the programming of the header.
- Pilot Tone Programming. Programmable header J5 establishes the pilot tone frequency for 10 kHz carrier frequency operation and 9 kHz carrier frequency operation. Refer to the factory test data sheets to check the programming of the header.
- High-Pass Filter Defeat. Left channel programmable header J12 and right channel programmable header J13 control an exciter second order 10 Hz high-pass filter. The high-pass filter is provided to remove low frequency residual products from specific audio processing units. The filter is shipped from the factory in the enabled position. Evaluate the audio processor and determine if low frequency residual products are present at the output of the

©2011 Broadcast Electronics

audio processing unit. If no low frequency residual products are present, refer to Figure 2-4 and disable the high pass filter.

- High Frequency Boost Defeat. Left channel programmable header J2 and right channel programmable header J3 control an exciter high frequency boost circuit. The high frequency boost circuit provides increased high frequency response to compensate for a Bessel filter in the PWM modulator. If the high frequency boost circuit is enabled to compensate for the filter, the circuit will result in a compromise between the frequency and transient response performance. If the high frequency boost circuit is enabled, the transmitter frequency response will increase approximately 2 dB at 10 kHz and the transient response will degrade. If the high frequency boost circuit is disabled, the transmitter frequency response will decrease approximately 2 dB at 10 kHz and the transient response will improve. The high frequency boost circuit is shipped from the factory in the disabled position.
- Monophonic Transmitter Operation Channel Select. Programmable header J4 selects either the left or right audio channel when the transmitter is operating in the monophonic mode with the stereo circuit board removed. The transmitter is shipped with the left channel audio selected for monophonic operations.

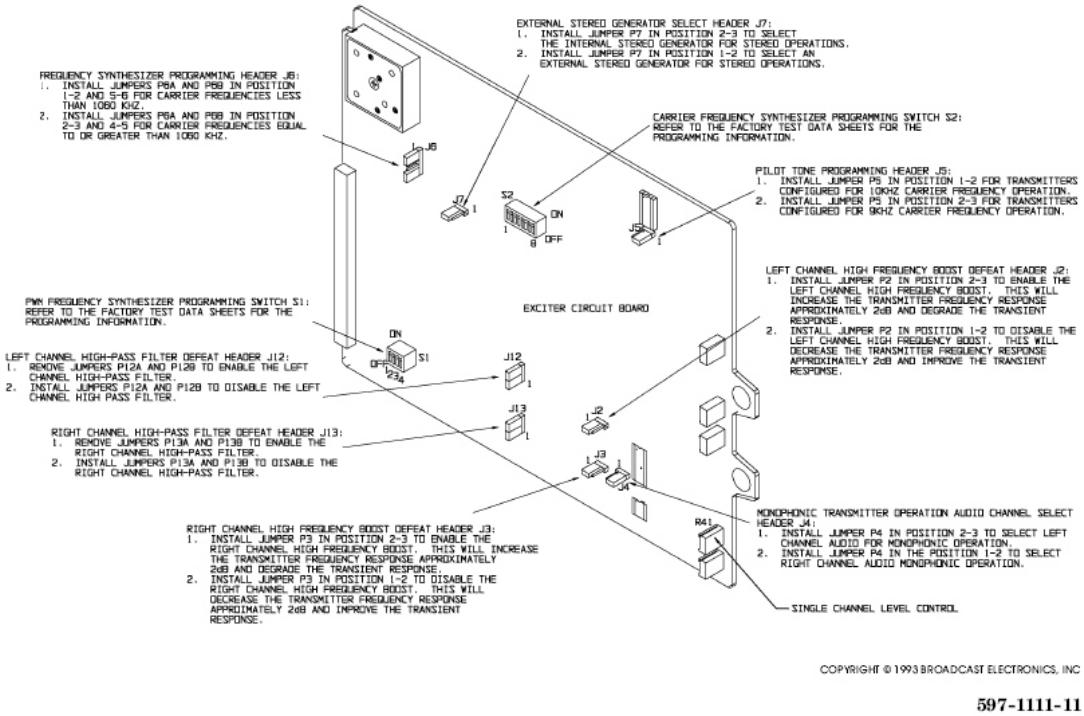

Figure 2-4. Exciter Circuit Board Programming

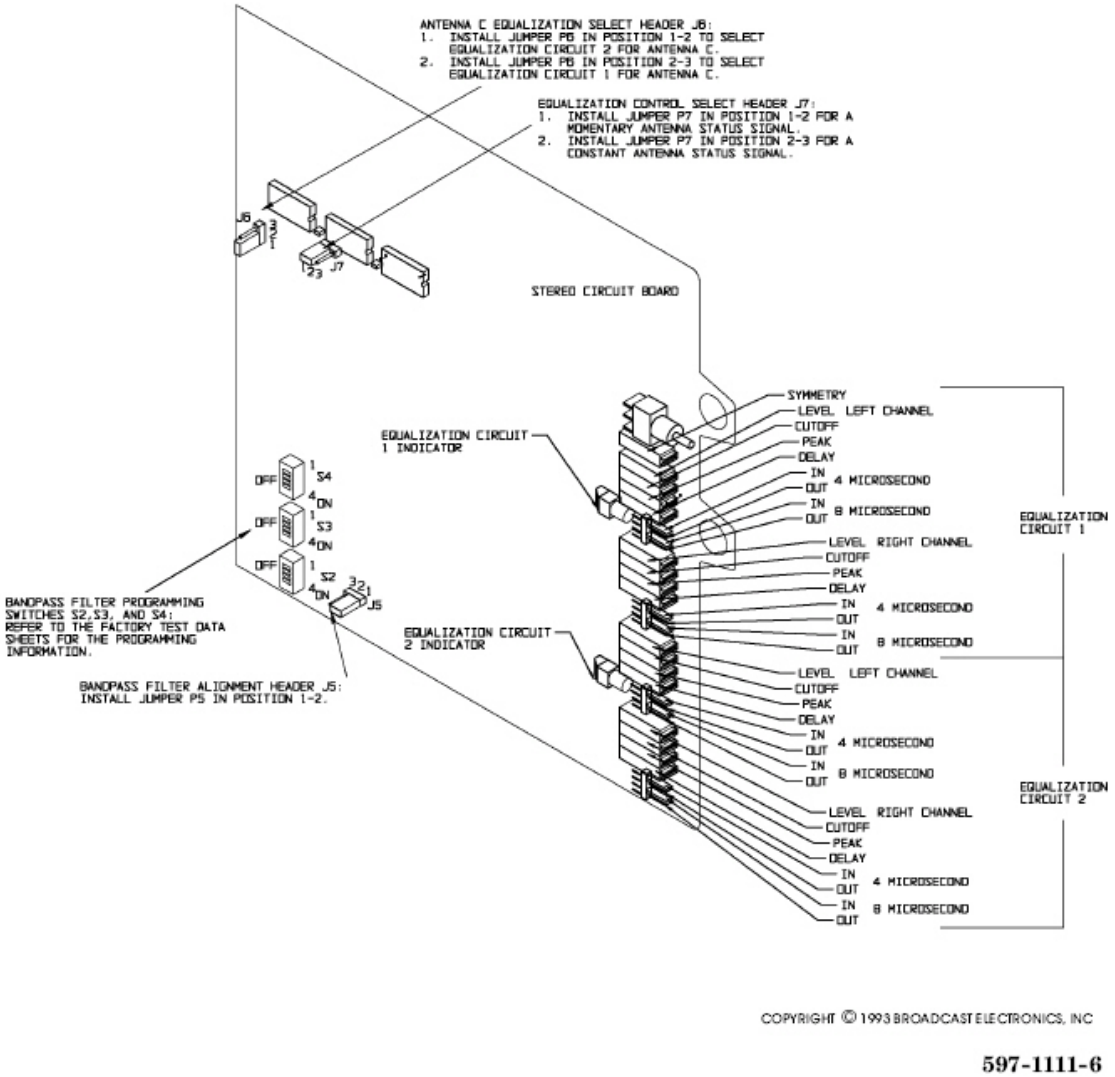

Figure 2-5. Stereo Circuit Board Programming

2.6.2 STEREO CIRCUIT BOARD.

Stereo circuit board programming is presented in Figure 2-5. Refer to Figure 2-5 and program the circuit board as required.

- Antenna C Equalization Select. Programmable header J6 selects equalization circuit 1 or equalization circuit 2 for operation with antenna C. The transmitter is shipped with equalization circuit 2 configured for operation with antenna C.
- Bandpass Filter Alignment. Programmable header J5 configures the bandpass filter for alignment. The jumper must be installed in position 1-2.
- Bandpass Filter Programming. Four position switches S2 through S4 program the band- pass filter. Refer to the factory test data sheets to check the programming of the switches.
- Equalization Control Select. Programmable header J7 configures the equalization circuitry for either a momentary or constant antenna status signal. The transmitter is shipped with the equalization control circuitry configured for a constant status signal.

©2011 Broadcast Electronics

2.6.3 CONTROLLER CIRCUIT BOARD.

Controller circuit board programming is presented in Figure 2-6. Refer to Figure 2-6 and program the circuit board as required.

- Power Level Trim Reset Select. Programmable header J12 determines if the power level control circuit is to reset when a power level switch/indicator is depressed. If the circuit is programmed to reset, the previous raise/lower information will be deleted and the transmitter will operate at the selected power level. If the circuit is programmed to retain the previous raise/lower information, the transmitter will operate above or below the selected power level as determined by previous raise/lower operations. For example, the transmitter is operating at power level 4 with the power level raised 5% by the raise/lower circuit. When power level 5 switch/indicator is depressed, the transmitter will operate at 5% above the power level 5 output due to the previously retained raise/lower information. The transmitter is shipped with power level trim reset circuit configured to reset.

- Antenna Power Level Programming. Switches S1, S2, and S3 assign power levels to a specific antenna. This programs the antenna interlock circuit to the station antenna system to prevent the transmitter from operating into an antenna at an incorrect power level. Switch S1 programs the power levels for antenna A. Switch S2 programs the power levels for antenna B. Switch S3 programs the power levels for antenna C. Power level 2 is assigned to an antenna by switch 1 on S1, S2, and S3. Power level 3 is assigned to an antenna by switch 2 on S1, S2, and S3. Power level 4 is assigned to an antenna by switch 3 on S1, S2, and S3. Power level 5 is assigned to an antenna by switch 4 on S1, S2, and S3. Power level 1 is assigned to each antenna. Evaluate the antenna system and program the circuit as required.

- AC Power Failure Automatic Transmitter Shutdown Time. Programmable headers J4, J5, J6, and J7 program the transmitter ac power failure automatic transmitter shutdown timer circuit. The circuit is designed to automatically operate the transmitter to off during a power failure after a specific time delay programmed by headers J4, J5, J6, and J7. J4 programs the circuit for a 1 minute shutdown time. J5 programs the circuit for a 4.5 minute shutdown time. J6 programs the circuit for a 17 minute shutdown time. J7 programs the circuit for a 68 minute shutdown time. The transmitter is shipped from the factory for a 1 minute shutdown time.

- Antenna Interlock Control Select. Programmable header J1 controls the antenna interlock circuit. The circuit can be disabled if the transmitter is to operate into only one antenna. The transmitter is shipped from the factory with the antenna interlock circuit disabled.

- Power Level Reference. Programmable headers J10 and J19 provide a reference for the power level circuit. For AM-1A models, ensure jumpers P10 and P19 are removed. For AM-500A models, ensure jumper P10 is installed and P19 is removed.

©2011 Broadcast Electronics

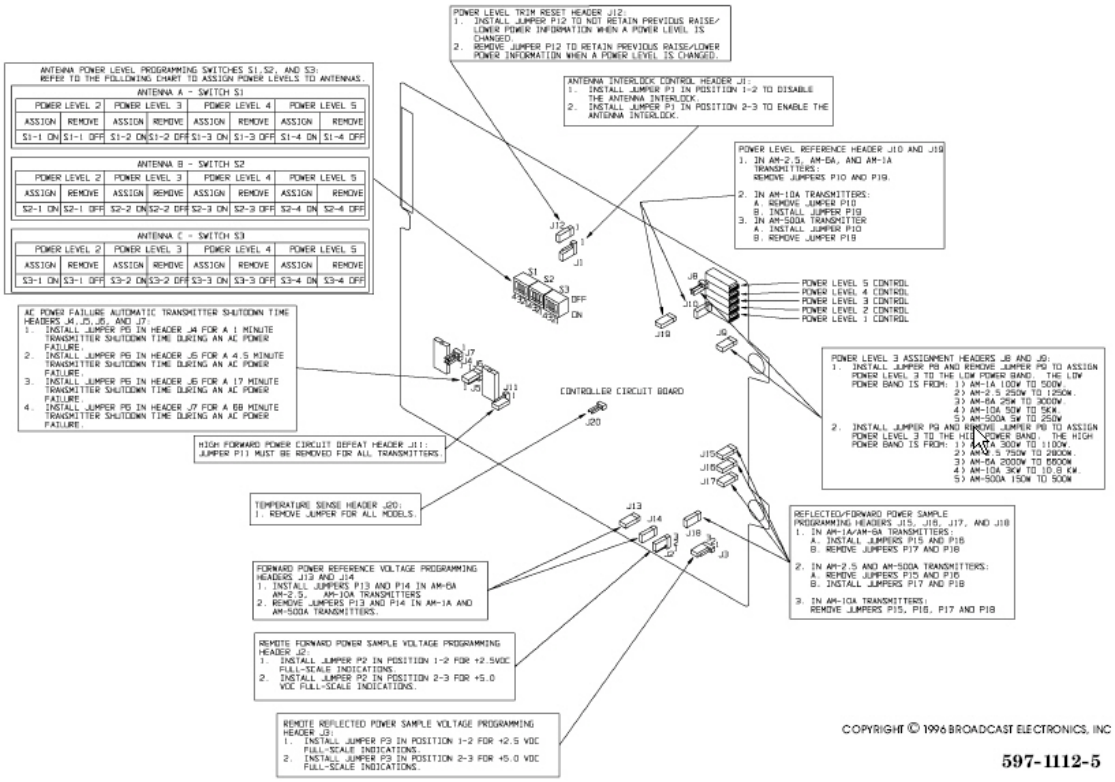

Figure 2-6. Controller Circuit Board Programming

- Power Level 3 Assignment. Programmable headers J8 and J9 control the power level assignment for the power level 3 switch/indicator. For AM-1A transmitters, the power level 3 switch/indicator can be programmed to control power from: 1) 100 watts to 500 watts or 2) 300 watts to 1100 watts. The power level 3 switch/indicator is shipped from the factory to control power from 100 watts to 500 watts. Program jumpers P8 and P9 as required. For AM-500A transmitters, the power level 3 switch/indicator can be programmed to control power from: 1) 5 watts to 250 watts or 2) 150 watts to 500 watts. The power level 3 switch/indicator is shipped from the factory to control power from 150 watts to 500 watts. Program jumpers P8 and P9 as required.

- Remote Reflected Power Sample Voltage Programming. Programmable header J3 controls the remote reflected power meter sample voltage. The remote reflected power sample can be programmed for +5.0 volt dc or +2.5 volt dc full-scale meter indications. The transmitter is shipped from the factory programmed for +5.0 volt dc full-scale remote reflected power meter indications.

- Remote Forward Power Sample Voltage Programming. Programmable header J2 controls the remote forward power meter sample voltage. The remote forward power sample can be programmed for +5.0 volt dc or +2.5 volt dc full-scale meter indications. The transmitter is shipped from the factory programmed for +5.0 volt dc full-scale remote forward power meter indications.

- High Forward Power Defeat. Programmable header J11 controls the high forward power detector circuit. Ensure jumper P11 is removed.

- Reflected/Forward Power Sample Programming. Programmable headers J15, J16, J17, and J18 control the reflected and forward power sample levels. Headers J15 and J17 control the forward power sample. Headers J16 and J18 control the reflected power sample. For AM-1A models, ensure: 1) jumpers P15 and P16 are installed and 2) jumpers P17 and P18 are removed. For AM-

500A models, ensure: 1) jumpers P15 and P16 are removed and 2) jumpers P17 and P18 are installed.

- Forward Power Reference Voltage Programming. Programmable headers J13 and J14 establish the forward power reference level for a comparator circuit. Ensure jumpers P13 and P14 are removed.

- Temperature Sense. Header J20 controls the temperature sense sample voltage. Ensure P20 is removed for all models.

2.6.4 POWER SUPPLY CIRCUIT BOARD.

The power supply circuit board programming is presented in the following text. Refer to the following text to check the power supply circuit board programming.

- Future Corrector Circuit. Programmable headers J9 and J10 establish parameters for a future corrector circuit. Ensure jumpers P9 is removed and P10 is installed.

- Model Programming. Programmable headers J5 through J8 establish parameters for different AM A-Series transmitters. Refer to the following text for the programming information.

TRANSMITTER	J5	J6	J7	J8
AM-1A	IN	OUT	OUT	IN
AM-500A	IN	OUT	IN	IN

2.6.5 Modulator CIRCUIT BOARD

The Modulator circuit board programming is presented in the following text. Refer to the following text to check the Modulator circuit board programming.

- Model Programming. Programmable headers J5 through J8 establish parameters for different AM Series transmitters. Refer to the following table for the programming information.

TRANSMITTER	J5	J6	J7	J8
AM-1A	IN	IN	IN	OUT
AM-500A	IN	IN	IN	OUT

2.6.6 Remote Control Connections

WARNING ENSURE PRIMARY POWER IS DISCONNECTED BEFORE PROCEEDING.

WARNING

The AM-1A/AM-500A transmitters are designed for complete remote control operation (refer to Figure 2-7). The transmitter will interface with almost any remote control unit.
The following text presents a description of the transmitter remote control functions and indications. The remote control functions are activated using a +5 to +15 volt dc signal. The remote indication functions: 1) require current limiting resistors and 2) provide up to 100 mA

for indicators. A +5 volt supply is provided on the ECU rear-panel for remote control operations. The remote control connections are located on the rear-panel of the ECU.

- Power Level Controls/Indicators. The transmitter is designed with five customer adjustable operating power controls. The controls are located at TB1-1 through TB1-5. A +5 to +15 volt dc signal is required to activate the desired function. Indications of power level control operations are located at TB1-7 through TB1-11. The power level status indicators will go LOW (0 volts dc) when activated.

- Transmitter Off Control/Indicator. The transmitter off control is located at TB1-6. A +5 to +15 volt dc signal is required to operate the transmitter to off. The transmitter off control indicator is located at TB1-12. The off indicator will go LOW (0 volts dc) when activated.

©2011 Broadcast Electronics

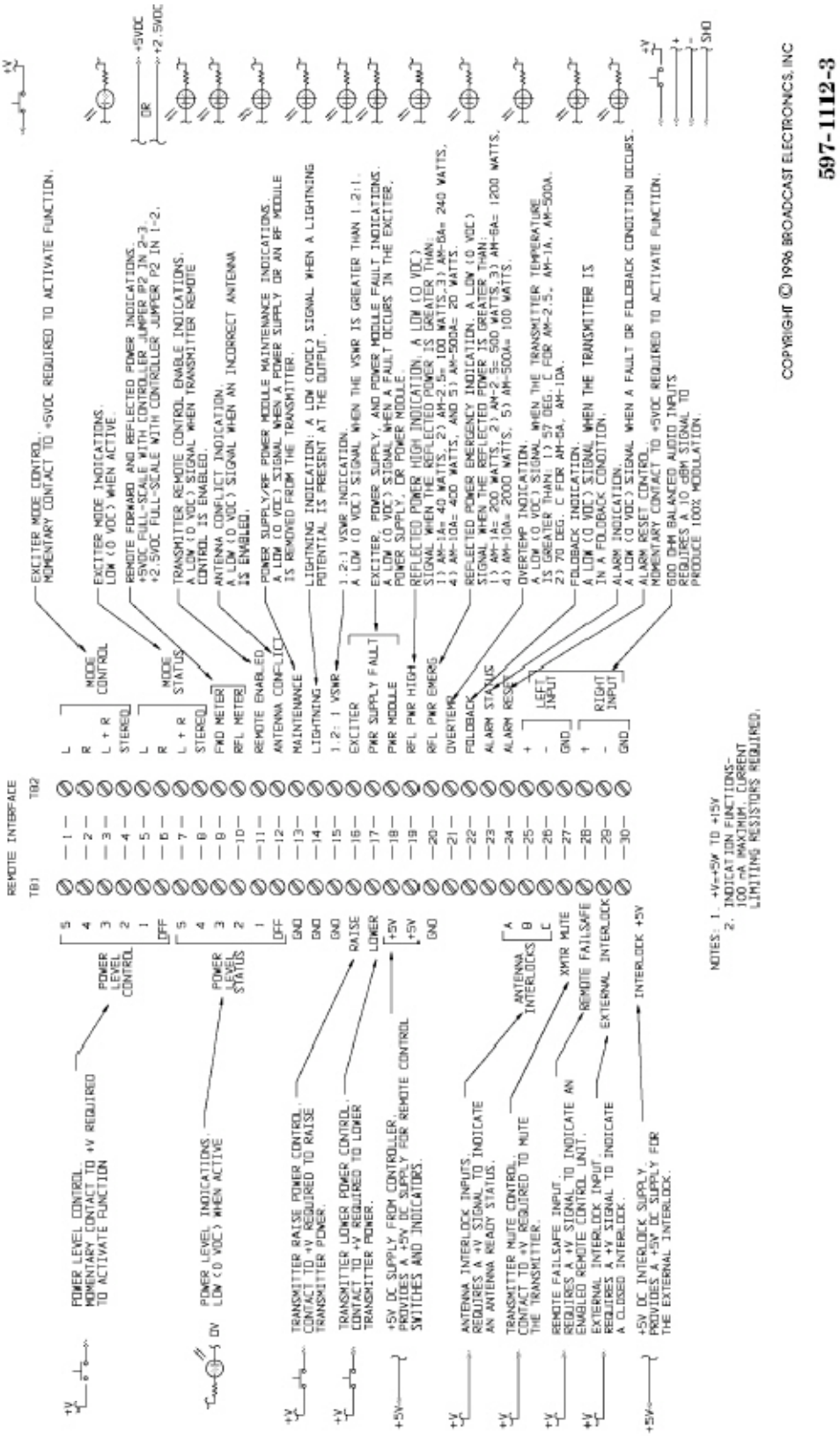

Figure 2-7. Remote Control and Audio Connections

- Power Level Raise/Lower Controls. The transmitter is designed with raise and lower controls to adjust the transmitter output power level. The controls are equipped with the ability to raise/lower power from 10% to 15% of the selected output power level. The controls are located at TB1-16 and TB1-17. A +5 to +15 volt dc signal is required to activate the desired function.

- Antenna Interlock Input. The antenna interlock inputs are designed for the connection of the status signals from antenna A, B, and C. The inputs are located at TB1-24 through TB1-26. The inputs require a +5 to +15 volt dc signal to indicate an antenna ready status.

- Transmitter Mute Input. The transmitter mute input is designed to mute the transmitter when activated. The input is located at TB1-27. The input requires a +5 to +15 volt dc signal to mute the transmitter.

- Remote Failsafe Input. The remote failsafe input is designed for the remote control unit failsafe control line. The input is located at TB1-28. The input requires a +5 to +15 volt dc signal to indicate an enabled remote control unit.

- External Interlock Input. The external interlock input is for the connection of an interlock external to the transmitter. The input is located at TB1-29. The input requires a +5 to +15 volt dc signal to indicate a closed interlock.

- Interlock +5V. The interlock +5 volt supply is provided for the external interlock. The +5 volt supply is located at TB1-30.

- Exciter Mode Controls/Indicators. The transmitter exciter is designed to be configured to mono left, mono right, mono L+R, or stereo modes of operation. The controls are located at TB2-1 through TB2-4. A +5 to +15 volt dc signal is required to activate the desired function.

  Indications of exciter modes of operation are located at TB2-5 though TB2-8. The exciter mode indicators will go LOW when activated.

- Remote Forward/Reflected Power Meter Indications. Remote reflected/forward power meter indications are located at TB2-9 and TB2-10. The indications are designed to be programmed for +5 volt dc full-scale meter indications or +2.5 volt dc full-scale meter indications.

- Remote Enabled Indications. The remote enabled indicator provides a signal to indicate the status of transmitter remote control operations. The remote enabled indicator is located at TB2-11. The indicator will go LOW to indicate when remote control operations are enabled.

- Antenna Conflict Indications. The antenna conflict indicator provides a signal to indicate when the transmitter is configured to operate into an incorrect antenna. The antenna conflict indicator is located at TB2-12. The indicator will go LOW (0 volts dc) to indicate when the transmitter is configured for operation into an incorrect antenna.

- Maintenance Indications. The maintenance indicator provides a signal to indicate when the transmitter power supply or RF power module is removed from the transmitter for maintenance. The maintenance indicator is located at TB2-13. The indicator will go LOW (0 volts dc) to indicate when the power supply/RF power module is removed for maintenance.

- Lightning Indications. For AM-1A models, the lightning indicator provides a signal to indicate when a greater than 900 volt potential is present at the output. For AM-500A models, the lightning indicator provides a signal to indicate when a greater than 650 volt potential is present at the output. The lightning indicator is located at TB2-14. The indicator will go LOW (0 volts dc) to indicate when a lightning potential is present at the transmitter output.

©2011 Broadcast Electronics

- 1.2 : 1 VSWR Indications. The 1.2 : 1 VSWR indicator provides a signal to indicate when a greater than 1.2 : 1 VSWR condition is present at the transmitter output. When this condition occurs, the front-panel VSWR indicator will change from green to yellow. The 1.2 : 1 indicator is located at TB2-15. The indicator will go LOW (0 volts dc) to indicate when a 1.2 : 1 VSWR condition is present at the transmitter output.

- Exciter/PWR Supply/PWR Module Fault Indications. The exciter, power supply, and power module fault indicators provide signals to indicate when an exciter, power supply, or a power module fault has occurred. The exciter, power supply, and power module fault indicators are located at TB2-16 through TB2-18. The indicators will go LOW (0 volts dc) to indicate when an exciter, power supply, or a power module fault has occurred.
- RFL PWR High Indications. For AM-1A models, the reflected power high indicator provides a signal to indicate when 40 watts of reflected power is present at the transmitter output. For AM-500A models, the reflected power high indicator provides a signal to indicate when 20 watts of reflected power is present at the transmitter output. When this condition occurs, the front-panel VSWR indicator will change to red. The high reflected power indicator is located at TB2-19. The indicator will go LOW (0 volts dc) to indicate when a reflected power high condition is present at the transmitter output.
- RFL PWR Emergency Indications. For AM-1A models, the reflected power emergency indicator provides a signal to indicate when greater than 200 watts of reflected power is present at the output of the transmitter. For AM-500A models, the reflected power emergency indicator provides a signal to indicate when greater than 100 watts of reflected power is present at the output of the transmitter. When this condition occurs, the front-panel VSWR indicator will flash. The reflected power emergency indicator is located at TB2-20. The indicator will go LOW (0 volts dc) to indicate when a reflected power emergency condition is present at the transmitter output.
- Overtemp Indications. The overtemp indicator provides a signal to indicate when the transmitter temperature is greater than 57°C. The overtemp indicator is located at TB2-21. The indicator will go LOW (0 volts dc) to indicate when transmitter temperature is greater than 57°C.
- Foldback Indications. The transmitter is designed to automatically reduce power when one of the following fault condition occurs: 1) high reflected power, 2) high forward power, 3) high temperature, or 4) detection of a high voltage by the lightning circuit. The foldback indicator is located at TB2-22. The indicator will go LOW (0 volts dc) to indicate when the transmitter is in a foldback condition.
- Alarm Status Indications. The alarm status provides a signal to indicate when a fault or foldback condition occurs. The alarm status indicator is located at TB2-23. The indicator will go LOW (0 volts dc) to indicate when the transmitter is in a fault or foldback condition.
- Alarm Reset Control. The alarm reset control is designed to reset the fault detection circuitry. The alarm reset control is located at TB2-24. A +5 to +15 volt dc signal is required to activate the function.

2.6.7 Wiring

Wiring consists of connecting audio, the RF transmission line, external interlocks, modulation monitor, ground, and ac power to the transmitter. Refer to the following text and connect the wiring to the transmitter.

A. AUDIO INPUT CONNECTION.

The transmitter is equipped with electronically balanced 600 Ohm left and right channel audio inputs. The audio inputs are located on the ECU rear-panel (refer to Figure 2-7). The inputs are designed to accept a +10 dBm signal at 600 Ohms.

©2011 Broadcast Electronics

WARNING ENSURE PRIMARY POWER IS DISCONNECTED BEFORE PROCEEDING.

WARNING

Audio is interfaced to the transmitter by: 1) selecting the appropriate cable and 2) connecting the cable to the terminals on the ECU rear-panel. To interface audio to the transmitter: 1) use Belden 8760 cable or equivalent and 2) refer to Figure 2-7 and connect the audio to the transmitter as follows:

1) Connect the plus signal line to the + terminal.
2) Connect the minus signal line to the - terminal.
3) Connect the shield to ground.

B. EXTERNAL STEREO RF INPUT.

The transmitter is equipped with an external stereo RF input on the ECU rear-panel. The input is designed for the connection of an external stereo generator or reference oscillator with a signal level from 5 to 15 volts peak-to-peak. If an external stereo signal/reference is to be applied to the transmitter, connect the signal to the J1 EXTERNAL STEREO RF INPUT connector on the ECU rear-panel and program jumper P7 on the exciter circuit board in position 1-2.

C. RF TRANSMISSION LINE CONNECTION.

The transmitter RF output receptacle is located on the transmitter top-panel (refer to Figure 2-8). The connection requires a Type N connector. Locate the RF output transmission line and attach the Type N connector to the RF OUT receptacle on the transmitter.

D. EXTERNAL INTERLOCK.

The AM-1A/AM-500A transmitter is equipped with an external interlock such as for a test load. The interlock will operate the transmitter to off when opened. The interlock is located at TB1-29 and TB1-30 on the rear-panel of the ECU unit. Refer to External Interlock Input and Interlock +5V in the REMOTE CONTROL CONNECTIONS section of the preceding text and perform the procedures to connect equipment to the transmitter external interlock

©2011 Broadcast Electronics

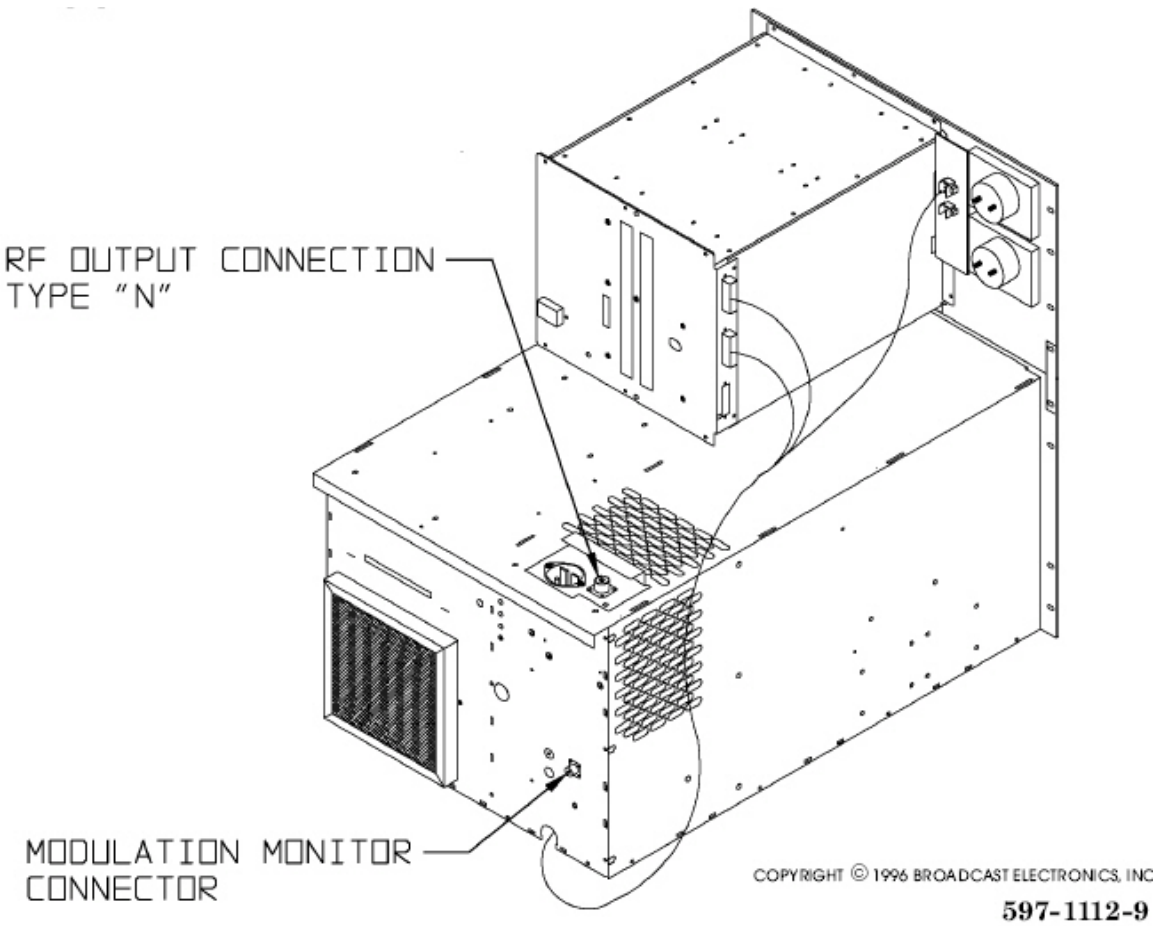

FIGURE 2-8. AM-1A/AM-500A RF OUTPUT AND MODULATION MONITOR CONNECTORS

E. MODULATION MONITOR.

The transmitter is equipped with a modulation monitor receptacle. The receptacle is located on the transmitter rear-panel. Refer to Figure 2-8 and connect the modulation monitor to the MOD MONITOR receptacle.

F. AC POWER CONNECTIONS. The AM-1A/AM-500A transmitter requires a single-phase source of 196V to 252V ac, 50 Hz or 60 Hz at 20 Amperes. AC power is applied to the transmitter through an ac line cord and modular connector. The transmitter ac power source must be protected by a 20 Ampere fused disconnect or circuit breaker (refer to Figure 2-9).

WARNING ENSURE PRIMARY POWER IS DISCONNECTED BEFORE PROCEEDING.

WARNING

G. Transmitter AC Line Cord Assembly. AC power is applied to the transmitter using an ac line cord and connector. The connector must be assembled to the line cord. To assemble the modular connector to an ac line cord, proceed as follows:

1. Refer to local electrical codes and select a line cord material for the transmitter ac line cord assembly. The ac line cord material must contain: 1) minimum 12 gauge

copper conductors and 2) the appropriate insulation type such as S or SO (refer to Figure 2-9). Determine the length of the cord required to route power to the transmitter and select the ac line cord material.

2. Locate the modular ac line cord connector in the accessory parts kit.

3. Assemble the ac line cord connector to the ac line cord by following the instructions contained in the ac line cord connector.

4. Connect the ac line cord to a 196V to 252V ac 50/60 Hz power source protected by a 20 Ampere fused disconnect or circuit breaker.

H. Main AC Input. Ensure the transmitter ac line cord is connected to an appropriate power source. Refer to Figure 2-9 and connect the transmitter ac line cord to the ac input receptacle on the top-panel of the output network chassis as shown. Route the line cord through the strain relief as shown.

WARNING ENSURE PRIMARY POWER IS DISCONNECTED BEFORE PROCEEDING. WARNING

WARNING ENSURE AN EARTH GROUND CONDUCTOR IS SECURELY CONNECTED TO THE TRANSMITTER GROUND LUG. WARNING

I. GROUND. The transmitter is equipped with a chassis ground system for operating safety. The ground system requires the connection of an earth ground. Refer to Figure 2-9 and connect an earth ground to the cabinet ground lug as shown using a 2 inch (5.08 cm) wide copper strap.

©2011 Broadcast Electronics

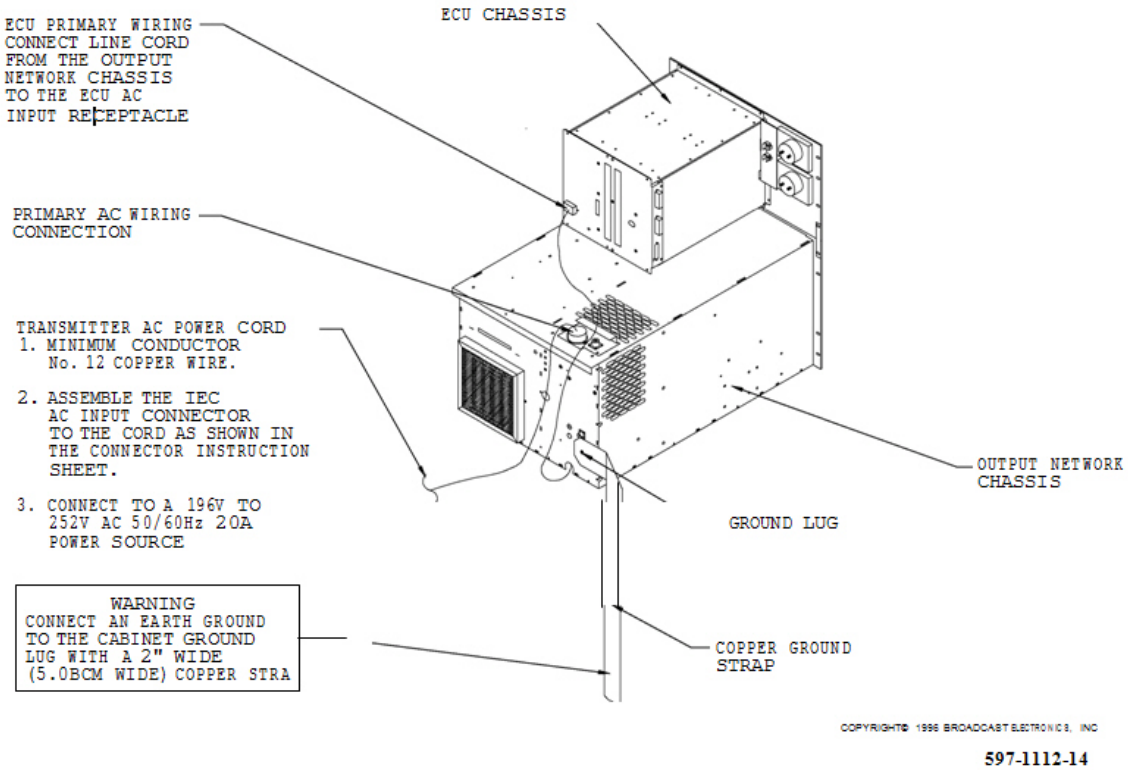

Figure 2-9 AM-1A / AM-500A Primary AC Wiring

2.6.8 Transmitter Site Lightning Protection System Checkout

CAUTION THE TRANSMITTER SITE LIGHTNING PROTECTION SYSTEM MUST BE INSPECTED

CAUTION AND IN PROPER WORKING CONDITON FOR RELIABLE TRANSMITTER OPERATION.

For reliable transmitter operation, the transmitter site lightning protection system must be inspected and in proper working condition. Due to the solid-state design of the transmitter, high voltage potentials from lightning activity can cause severe damage to the transmitter circuitry. Therefore, perform the following procedures to inspect and improve the lightning protection system at the transmitter site. Refer to the NAB Radio Handbook for additional transmitter site lightning protection system information.

A. ANTENNA BALL-GAP LIGHTNING ARRESTOR. Each tower in the antenna system must be equipped with a ball-gap lightning arrestor (refer to Figure 2-10). The ball-gap arrestor is designed to safely conduct lightning potentials to ground. Inspect the ball-gap arrestors by performing the following procedures.

- Ball-Gap Position. The antenna ball-gap lightning arrestor must be aligned horizontally. Do not align the ball-gaps vertically. Vertical alignment allows rain water to collect on the balls. This reduces the gap separation and results in arcing during rain activity.
- Ball-Gap Separation. The antenna ball-gap lightning arrestor must be adjusted for the proper separation. If the ball-gap separation is too wide, the arrestor will not function. If the ball-gap

separation is too narrow, the arrestor will arc during normal transmitter operation. As a general rule: 1) a separation of approximately 0.020 in. for each peak kilovolt at the transmitter tower is required or 2) 0.125 inch for each 9.4 peak kilovolt at the transmitter tower is required.

The recommended method for ball-gap separation adjustment is to adjust the gap to prevent arcing during peak modulation activity. To adjust the separation, proceed as follows:

1. Adjust the ball-gap separation using the general rule presented in the preceding text.
2. Operate the transmitter at peak modulation and check the ball-gap for arcing activity.

WARNING DISCONNECT ALL TRANSMITTER PRIMARY POWER BEFORE
WARNING PROCEEDING.

3. Operate the transmitter to off.

4. Adjust the ball-gap separation as follows:

A. If no arcing activity is detected, reduce the ball-gap separation. B. If arcing activity is detected, increase the ball-gap separation.

5. Repeat the procedure until the ball-gap separation is adjusted for the smallest gap possible without arcing during peak modulation activity.

B. ANTENNA-TUNING-UNIT SPARK-GAP LIGHTNING ARRESTOR. The antenna-tuning-unit (ATU) must be equipped with a spark-gap lightning arrestor (refer to Figure 2-10). The spark-gap arrestor can be: 1) a ball-gap type, or 2) a horn type. Adjust the spark-gap for the smallest possible gap without arcing during peak modulation activity.

©2011 Broadcast Electronics

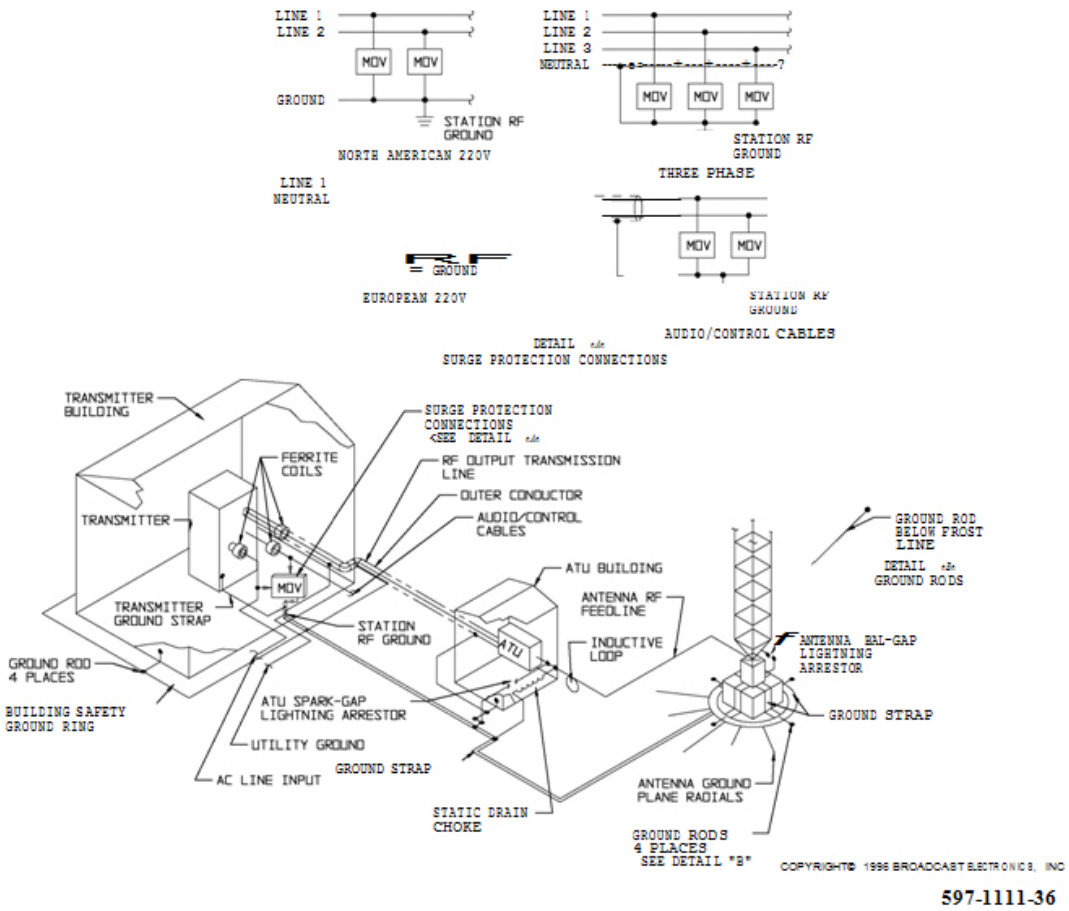

Figure 2-10 Antenna Lightning Protection System

C. TRANSMITTER SITE GROUNDING SYSTEM. The transmitter site grounding system must be properly connected for reliable transmitter operation. A typical transmitter site grounding system is shown in Figure 2-10. Perform the following procedures to ensure the grounding system connections are secure.

1. Ensure the antenna base ground strap is securely connected to the antenna ground plane radials.

2. Ensure the antenna ball-gap lightning arrestor is securely connected to the lightning ground rod system and to the antenna ground plane radials.

3. Ensure the ATU ground and the station RF ground is securely connected to the antenna ground plane radials.

D. CABLE PROTECTION. The ac line cable, audio/control cables, and the RF output transmission line require a combination of MOV and ferrite core protection to prevent the entry of lightning potentials (refer to Figure 2-10). Refer to the following text to install MOVs and ferrite cores to prevent the conductance of lightning potentials.

- MOV. Refer to Figure 2-10 and ensure MOVs are connected from the ac line and audio/control cable conductors to the station RF ground as shown. The MOVs should be rated for 20,000 Ampere surges (BE P/N 140-0021).

- Ferrite Core. The ac line cable, the audio/control cables, and the RF output transmission line also require the placement of ferrite cores. The cores are designed to create a high impedance for undesired current paths such as lightning. Ferrite cores for placement on ac line, audio/control, and output transmission line cables are located in the accessory parts kit. Locate the ferrite cores in the accessory kit. Refer to Figure 2-10 and install the cores by performing the following procedures.

- Modulation Monitor Core. One 375-0009-001 ferrite core is designed to be installed on the modulation monitor cable. Install the core on the modulation monitor cable by: routing the cable through the core and 2) wrapping the cable to create one cable loop around the core. The core can be installed at any location on the cable.

- Audio/Remote Control/Status Core. A second 375-0009-001 ferrite core is designed to be installed on the audio and remote control/status cables. Install the core on the audio and remote control/status cables by: 1) routing the cables through the core and 2) if possible, wrapping the cables to create one cable loop cable around the core. The core can be installed at any location on the cables.

- AC Input Core. A 375-0007-001 ferrite core is designed to be installed on the transmitter ac input cable. Install the core by routing: 1) both ac line phase cables through the core or both ac line phase cables and ground cable through the core. Place the core at any location between the wall mounted fused disconnect and the transmitter ac input.

- RF Output Core. A 375-0007-001 ferrite core is designed to be installed on the transmitter RF output transmission line cable. Install the core by routing the RF output cable through the core. Place the core at any location between the transmitter RF output connector and the next equipment connection in the RF output system such as the antenna phasing system. It is recommended the core be placed outside the transmitter cabinet if a cabinet is supplied.

E. ANTENNA RF FEED LINE. Check the antenna RF feed line between the ATU and the tower. Ensure the line contains one or more one foot diameter loops. The loops function as a series inductance and increase the impedance of the line.

2.6.9 Transmission Line And Antenna Checkout

CAUTION THE TRANSMISSION LINE AND ANTENNA MUST BE INSPECTED AND IN PROPER

CAUTION WORKING CONDITION FOR RELIABLE TRANSMITTER OPERATION.

The transmission line and antenna must be inspected and in proper working condition for reliable transmitter operation. Perform the following procedures to inspect the transmission line and antenna.

A. ANTENNA VSWR. The transmitter is designed to operate into an antenna with a maximum 1.30 : 1 VSWR. Check the antenna VSWR. If the VSWR is greater than 1.30:1, contact the Broadcast Electronics Customer Service Department. Typically, the antenna will require the installation of an additional tuning unit to reduce the antenna VSWR to less than 1.30:1. If an additional tuning unit is required, the transmitter may be equipped with the optional tuning unit (refer to APPENDIX A for tuning unit information).

©2011 Broadcast Electronics

B. COAXIAL SWITCH CONTROLLER. To prevent damage to the transmitter, the transmitter must be muted during any antenna change sequence. Inspect the motorized coaxial switch controller and ensure the unit outputs a +5 volt to +15 volt mute signal. Ensure the mute signal is applied to the transmitter.

C. ATU AND PHASOR CHECKOUT. Inspect the ATU and the antenna phasor unit (if installed in the system) for arcing activity during peak modulation periods. Repair or replace any devices to prevent arcing during peak modulation periods.

2.6.10 Initial Checkout

WARNING ENSURE PRIMARY POWER IS DISCONNECTED BEFORE PROCEEDING.

WARNING

Prior to performing the preliminary operating procedures, the transmitter should be checked to ensure all installation and connection procedures have been performed. To check the transmitter, proceed as follows:

A. Ensure all ECU circuit boards and the RF power module are installed.

B. Ensure the RF output transmission line is connected to the transmitter output network.

C. Ensure the station earth ground is connected to the transmitter ground terminal.
D. Ensure all audio and control cables are connected to the transmitter.

E. Ensure the modulation monitor is connected to the transmitter.

F. Ensure all ac power connections are secure.

G. Ensure the station RF output transmission line system and antenna are in proper working condition.

H. Ensure the antenna lightning protection system is in proper working condition.

2.6.11 Preliminary Operation And Adjustment

WARNING THE TRANSMITTER POWER SUPPLY CONTAINS MULTIPLE GROUND CIRCUITS WITH HIGH AC AND DC POTENTIALS WITH RESPECT TO THE CABINET WHICH IS AT EARTH POTENTIAL. NEVER OPERATE THE TRANSMITTER WITH THE TOP-PANELS REMOVED.

WARNING

1. Operate the POWER circuit breaker to ON. The ECU and the power module front-panel indicators will illuminate.

2. Depress the power level 1 switch/indicator to illuminate the switch/indicator.

3. Operate the FORWARD POWER meter switch to LOW and observe the forward power

©2011 Broadcast Electronics

indication.

4. Operate the REFLECTED POWER meter switch to LOW and observe the reflected power indication.

2.6.12 Power Level And Modulation Monitor Calibration Adjustments

The transmitter power levels are adjusted to the levels specified in the sales order at the factory. If no power levels are specified, the levels are adjusted as follows:

AM-1A
Power level 1 = 100 watts
Power level 2 = 250 watts
Power level 3 = 500 watts
Power level 4 = 750 watts
Power level 5 = 1000 watts

AM-500A
Power level 1 = 50 watts
Power level 2 = 125 watts
Power level 3 = 250 watts
Power level 4 = 375 watts
Power level 5 = 500 watts

If desired, the transmitter power levels can be changed at any time. If the transmitter power levels are adjusted, the modulation monitor output must also be re-calibrated. To change the power level and re-calibrate the modulation monitor output, proceed as follows:

WARNING DISCONNECT ALL TRANSMITTER PRIMARY POWER BEFORE
WARNING PROCEEDING.

Operate the front panel POWER circuit breaker to OFF.

Refer to Figure 2-11 and connect the test equipment to the transmitter modulation connector as shown.

©2011 Broadcast Electronics

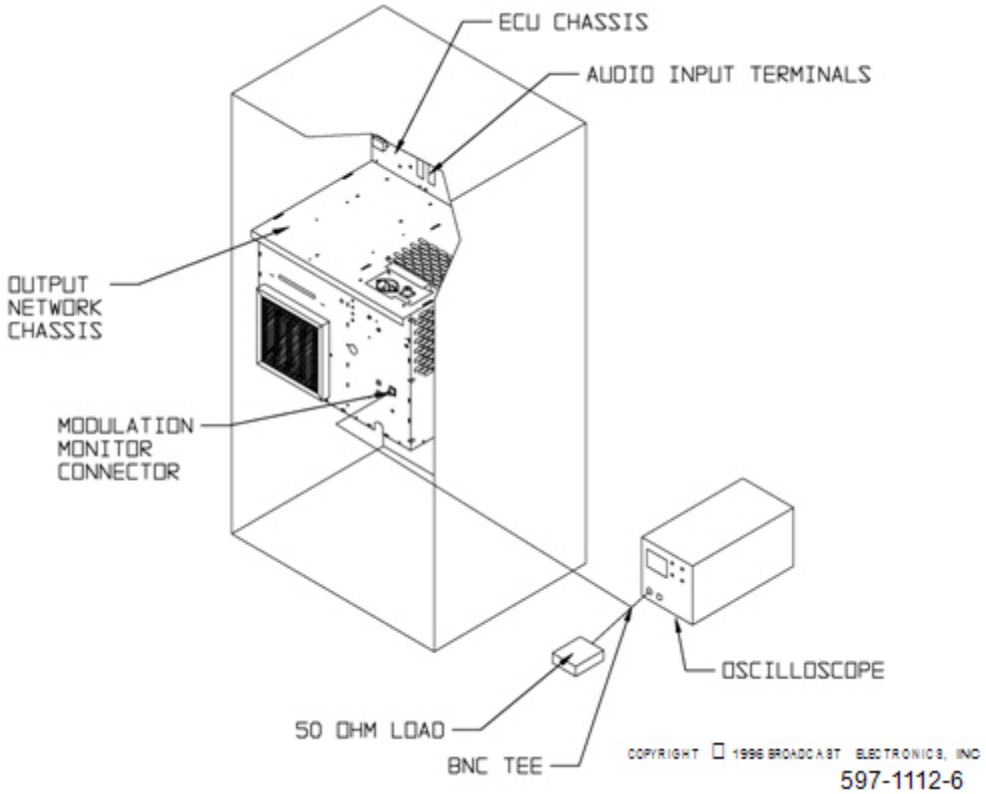

FIGURE 2-11. TEST EQUIPMENT CONNECTIONS, POWER LEVEL CALIBRATION

Operate the transmitter front panel POWER switch to ON.

Depress power level control 1 switch/indicator to illuminate the switch/indicator.

Operate the FORWARD POWER meter switch to LOW or HIGH as required and observe the forward power indication.

Refer to Figure 2-6 and adjust the power level 1 control on the controller circuit board to obtain the desired indication on the FORWARD POWER meter. For AM-1A models, the control range is from 5 watts to 500 watts. For AM-500A models, the control range is from 5 watts to 250 watts.

Refer to Figure 3-1 in SECTION III, OPERATION and adjust the power level 1 modulation monitor calibration control for a 5.7 volt peak-to-peak signal on the oscilloscope.

Repeat the procedure for power levels 2 through 5. The power level control ranges are as follows:

AM-1A

1. Power level 2 - 5 watts to 500 watts.
2. Power level 3 - 5 watts to 500 watts or 300 watts to 1100 watts as programmed by a jumper on the controller circuit board.
3. Power level 4 - 300 watts to 1100 watts.
4. Power level 5 - 300 watts to 1100 watts.

AM-500A

1. Power level 2 - 5 watts to 250 watts.
2. Power level 3 - 5 watts to 250 watts or 150 watts to 500 watts as programmed by a jumper on the controller circuit board.
3. Power level 4 - 150 watts to 500 watts.

4. Power level 5 - 150 watts to 500 watts.

WARNING DISCONNECT ALL TRANSMITTER PRIMARY POWER BEFORE PROCEEDING WARNING

Operate the front-panel POWER switch to OFF.

Disconnect the cable from the transmitter modulation monitor connector.

STEREO ADJUSTMENT. If the transmitter is operated in the stereo mode, the transmitter stereo circuitry must be adjusted to compensate for antenna system variances. The primary objective in the adjustment of the transmitter is to configure the stereo circuitry to minimize distortion and maximize separation across the entire audio band. A proof of performance sheet is provided at the end of this section to record performance measurements. To adjust the stereo circuitry, perform the following procedures and record the measurements on the proof of performance sheet at the end of this section.

WARNING DISCONNECT ALL TRANSMITTER PRIMARY POWER BEFORE PROCEEDING. WARNING

Operate the front-panel POWER switch to OFF.

Refer to Figure 2-12 and connect the test equipment as shown.

Operate the oscilloscope for: 1) 200 mV/div sensitivity and 2) dc coupled.

Refer to Figure 2-7 and connect an audio generator to the audio input terminals on ECU rear-panel.

Operate the front-panel POWER switch to ON.

Select the antenna which is configured for equalization circuit 1 operation (refer to STEREO CIRCUIT BOARD PROGRAMMING in the preceding text if required) and determine a power level.

Depress the desired power level switch/indicator to illuminate the switch/indicator.

Refer to SECTION III, OPERATION and perform the following:

1. Operate the stereo circuit board mode control switch to illuminate the stereo indicator. When power is applied to the transmitter, the stereo circuit board will automatically be configured to the stereo mode.

2. Operate the stereo circuit board pilot switch to off.

3. Ensure the equalization circuit 1 indicator on the stereo circuit board is illuminated.

©2011 Broadcast Electronics

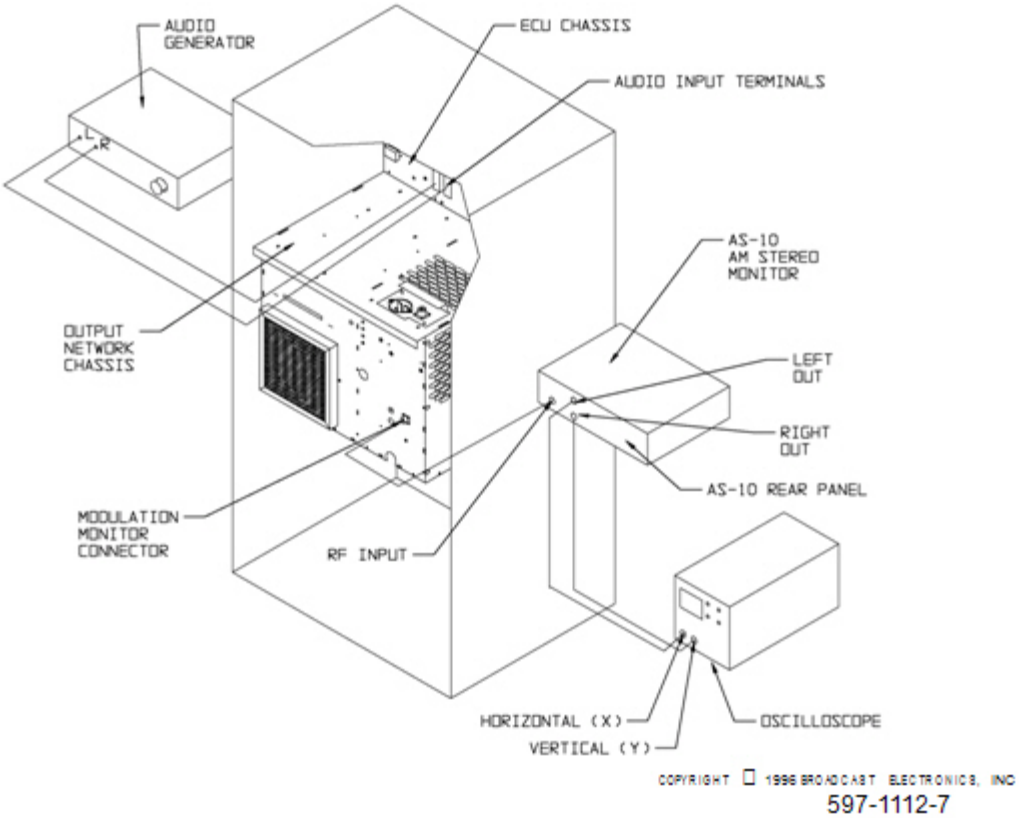

FIGURE 2-12. TEST EQUIPMENT CONNECTIONS, SEPARATION

Adjust equalization circuit 1 as follows:

1. Adjust the audio generator for a 1 kHz left channel output at +10 dBm and observe the lissajous pattern displayed on the oscilloscope.
2. Refer to Figure 2-5 and adjust the left channel level control to obtain a horizontal lissajous pattern (refer to Figure 2-13).
3. Adjust the group delay as follows:
   A. Configure the group delay circuitry for adjustment as follows:
      1. Refer to Figure 2-5 and configure the left channel 4 microsecond and 8 microsecond sections to in.
      2. Refer to Figure 2-5 and operate the left channel delay control fully counterclockwise.

   B. Refer to Figure 2-5 and adjust the left channel delay control to close the oscilloscope display and obtain a straight-line lissajous display as shown in the maximum left channel separation lissajous pattern (refer to Figure 2-13). If the display will not close, proceed as follows:
      1. Refer to Figure 2-5 and: 1) configure only the 8 microsecond delay section to in and 2) adjust the left channel delay control to close the oscilloscope display. If the display will not close, refer to Figure 2-5 and: 1) configure only the 4 microsecond delay section to in and 2) adjust the left channel delay control to close the oscilloscope display.

Adjust the separation at 7 kHz as follows:

A. Adjust the audio generator for a 7 kHz left channel output at +10 dBm.

B. Refer to Figure 2-5 and adjust the left channel cutoff and peak controls to obtain a maximum left channel separation lissajous pattern as shown in Figure 2-13.

C. If a maximum left channel lissajous pattern cannot be obtained, refer to Figure 2-5 and adjust the left channel delay control to close the oscilloscope display and obtain a straight-line lissajous pattern (refer to Figure 2-13).

5. Repeat the entire procedure for the right channel. Adjust the right channel level, cutoff, peak, and delay controls as required to obtain optimum separation and distortion from the right channel.

6. Repeat the entire procedure for equalization circuit 2. Adjust the equalization circuit 2 using the equalization 2 left/right channel level, cutoff, peak, delay, controls and the equalization 2 group delay sections to obtain optimum separation and distortion.

Once the stereo adjustment is complete: 1) refer to SECTION III, OPERATION and operate the pilot switch on the stereo circuit board to ON and 2) remove the test equipment.

SINGLE CHANNEL LEVEL. The transmitter is equipped with a single channel level control. When the transmitter is operating in the stereo mode, the level control is designed to boost a remaining audio channel level in the event of a failure in one channel. For transmitters operating in the stereo mode, adjust the single channel level control as follows:

WARNING DISCONNECT ALL TRANSMITTER PRIMARY POWER BEFORE PROCEEDING.

WARNING

Operate the front-panel POWER switch to OFF.

If an audio processor is used with the transmitter, ensure the processor is connected as follows:

1. Ensure normal program audio is connected to the processor input.

2. Ensure the audio processor output is connected to the transmitter audio input.

Operate the front-panel POWER switch to ON.

Depress a desired power level switch/indicator to illuminate the switch/indicator.

Refer to SECTION III, OPERATION and operate the stereo circuit board mode control switch to illuminate the stereo indicator.

Disable one channel applied to the transmitter.

If an audio processor is used with the transmitter, refer to the audio processor manual and adjust the processor single channel limiter as described in the procedure.

Refer to SECTION III, OPERATION and operate the stereo circuit board mode control switch to illuminate the mono left or mono right indicator as determined by the remaining operating audio channel applied to the transmitter.

Refer to Figure 2-4 and adjust the single channel level control on the exciter circuit board as required to obtain an approximate 100% modulation indication on the modulation monitor.

©2011 Broadcast Electronics

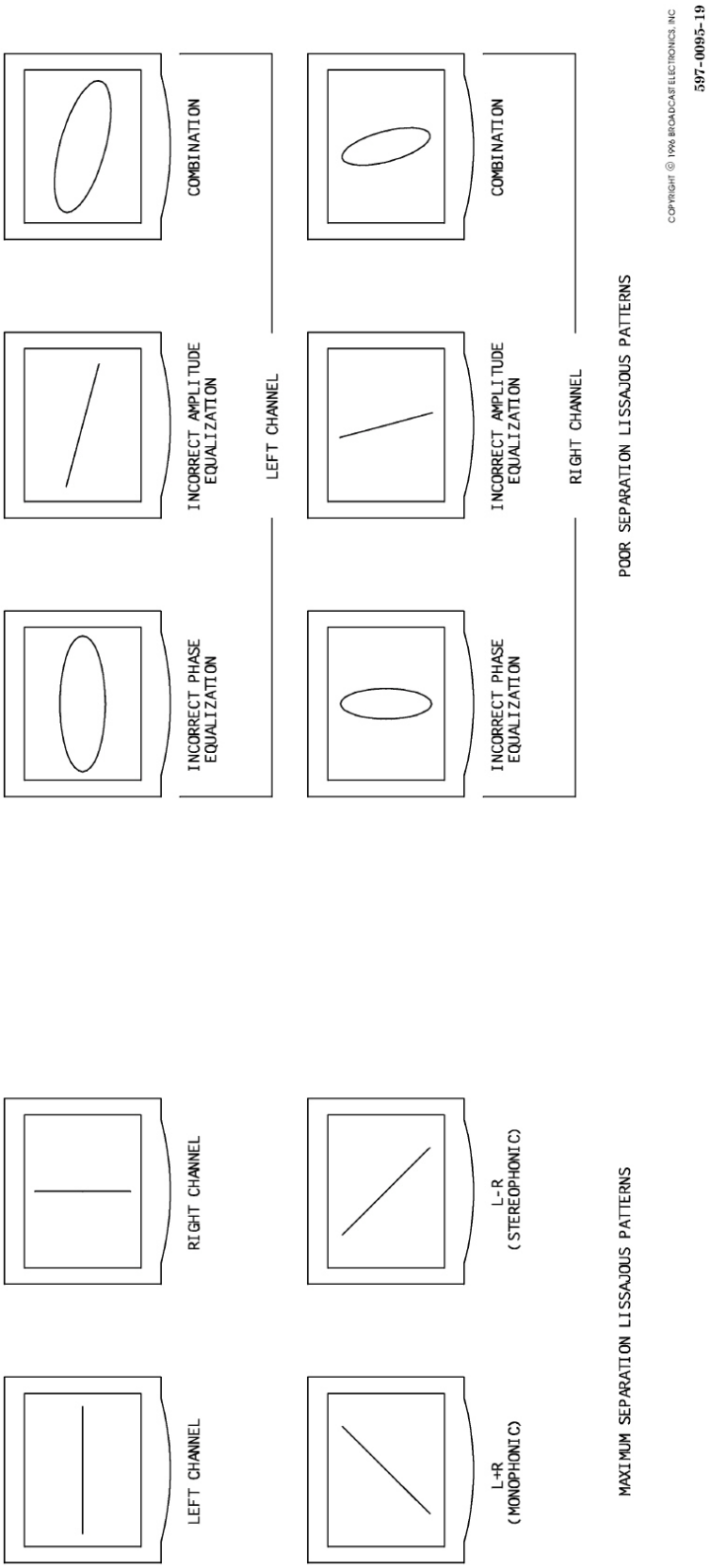

Figure 2-13. Equalization Lissajous Patterns

3 Operation

This section identifies all controls and indicators associated with the AM-1A/AM-500A transmitters and provides standard operating procedures.

3.1 CONTROLS AND INDICATORS.

Figures 3-1 through 3-3 present the location of all controls and indicators associated with normal operation of the AM-1A/AM-500A transmitters. Tables 3-1 through 3-3 present the functions of each control or indicator. Refer to Figures 3-1 through 3-3 and Tables 3-1 through 3-3 for a description of the controls and indicators associated with the transmitter.

TABLE 3-1. AM-1A / AM-500A CONTROLS AND INDICATORS

INDEX NO.	NOMENCLATURE	FUNCTION
1	FORWARD POWER Meter	Displays the transmitter forward power output in watts as selected by the FORWARD POWER Meter LOW/HIGH/OFF switch.
2	FORWARD POWER Meter HIGH/LOW/OFF Switch	Configures the FORWARD POWER meter: 1) to display forward power information on the HIGH scale, 2) to display forward power information on the LOW scale, or 3) to off. In the AM-1A, the HIGH SCALE IS FROM 0 TO 1200 WATTS AND 2) low SCALE IS FROM 0 TO 300 WATTS. In the AM-500A, the HIGH scale is from 0 to 600 watts and 2) LOW scale is from 0 to 150 watts.
3	REFLECTED POWER Meter	Displays the transmitter reflected power output in watts or the AC input voltage in volts as selected by the REFLECTED POWER HIGH/LOW/VAC Switch.
4	REFLECTED POWER Meter HIGH/LOW/VAC Switch	Configures the REFLECTED POWER Meter to display: 1) reflected power information on the HIGH scale, 2) reflected power information on the LOW scale, or 3) the AC input voltage. In the AM-1A, the HIGH scale is from 0 to 120 watts and 2) LOW scale is from 0 to 30 watts. The AC volts scale is from 150 to 300 volts. In the AM-500A, the HIGH scale is from 0 to 60 watts and 2) LOW scale is from 0 to 12 watts. The AC volts scale is from 150 to 300 volts.
5	POWER Switch	Controls the application of AC power to the transmitter.
6	RF POWER MODULE	A modular plug-in assembly containing two RF power amplifier circuit boards and one modulator circuit board. In the AM-1A, the power module is designed to output 1100 watts of RF power. In the AM-500A, the power module is designed to output 550 watts of RF power.
7	Modulation Monitor Calibration Controls	Calibrates the modulation monitor sample to power levels 1 through 5.

©2011 Broadcast Electronics

TABLE 3-2. ECU CONTROLS AND INDICATORS

INDEX NO.	NOMENCLATURE	FUNCTION
1	EXCITER Indicator	Displays the operating status of the exciter. GREEN Display – Indicates normal exciter operation. RED Display – Indicates an exciter fault.
2	POWER MODULES Indicator	Displays the operating status of the transmitter RF power module. GREEN Display – Indicates the RF power module is operating normally. YELLOW Display – Indicates a fault in the RF power module. RED Display – Indicates a fault in the RF power module.
3	POWER SUPPLY Indicator	Displays the operating status of the transmitter power supply system. GREEN Display – Indicates normal power supply system operation. YELLOW Display – Indicates the power supply is removed from the transmitter. RED Display – Indicates a power supply system fault.
4	ANTENNA VSWR Indicator	Displays the condition of the antenna system. GREEN Display – Indicates a normal antenna load. YELLOW Display – Indicates a VSWR condition of 1.2 : 1. RED Display – For AM-1A models, indicates a 40 watt reflected power condition or a condition which results in a high forward power indication of greater than 20%. For AM-500A models, indicates a 20 watt reflected power condition or a condition which results in a high forward power indication of greater than 20%. When this condition occurs, the transmitter output power will fold back. FLASHING RED Display - For AM-1A models, indicates a 200 watt reflected power condition. For AM-500A models, indicates a 100 watt reflected power condition. When this condition occurs, the transmitter will operate to off.
5	POWER CONTROL Switch/ Indicators	SWITCHES – A group of five switches designed to select five customer adjustable transmitter operating output power levels. For AM-1A models, switches 1 and 2 can be adjusted to obtain output power levels from 5 watts to 500 watts. Switches 4 and 5 can be adjusted to obtain output power levels from 300 watts to 1100 watts. Switch 3 is designed to be customer assigned to control power in the 5 to 500 watt range or the 300 to 1100 watt

©2011 Broadcast Electronics

		range. For AM-500A models, switches 1 and 2 can be adjusted to obtain output power levels from 5 watts to 250 watts. Switches 4 and 5 can be adjusted to obtain output power levels from 150 watts to 500 watts. Switch 3 is designed to be customer assigned to control power in the 5 to 250 watt range or the 150 to 500 watt range. INDICATORS – Illuminates to indicate an associated power control switch has been selected.
6	OFF Switch/ Indicator	SWITCH – Deenergizes the transmitter RF output power and configures the unit to off. INDICATOR – Illuminates to indicate the OFF switch has been selected.
7	POWER ▲Switch/ Indicator	SWITCH- Instructs the system controller to raise the transmitter output power. The switch is designed with the ability to raise power from 10% to 15% of the selected output power level. INDICATOR – During manual operating conditions, illuminates to indicate the POWER ▲switch is selected. During automatic raise conditions, the indicator will illuminate to indicate the rate of automatic power increase.
8	POWER ▼ Switch/ Indicator	SWITCH – Instructs the system controller to lower the transmitter output power. The switch is designed with the ability to lower power from 10% to 15% of the selected output power level. INDICATOR – During manual operating conditions, illuminates to indicate the POWER ▼switch is selected. During automatic lower condition, the indicator will illuminate to indicate the rate of automatic power decrease.
9	RESET Switch/ Indicator	SWITCH – Clears the transmitter fault circuitry when: 1) the switch is depressed and 2) if the fault condition is removed. INDICATOR – Illuminates to indicate a fault has been encountered.
10	EXCITER MONITOR STEREO Indicator	Illuminates to indicate the exciter is configured to the stereo mode.
11	EXCITER MONITOR MODE Switch/ Indicator	SWITCH – Selects either left/right channel or L-R/L+R information for presentation on the EXCITER MONITOR LED bar-graph display. INDICATOR – Indicates the type of information selected for display on the exciter monitor. The L/R indicator will illuminate to indicate the display of left/right channel information. The L+R/L-R indicator will illuminate to indicate the display of L+R/L-R information.
12	EXCITER MONITOR +/- POLARITY Switch/ Indicator	SWITCH – Selects either positive or negative peak audio for application to the EXCITER MONITOR LED bar-graph display. INDICATOR – Indicate the signal polarity selected for display on the exciter monitor. The + indicator will illuminate to indicate the display of positive information. The – indicator will illuminate to

©2011 Broadcast Electronics

		indicate the display if negative information.
13	EXCITER MONITOR LED Bar-Graph Display	Displays left, right, L+R, or L-R audio channel peak levels as selected by the EXCITER MONITOR MODE and POLARITY switches. Each indicator will illuminate at the level indicated on the display. In addition, the display is equipped with an autorange feature to allow the monitoring of signal in the 0.5% to 14.5% range. Indications of autorange operation are provided by the R/L-R and L/L+R X10 indicators.
14	EXCITER MONITOR MONO Indicator	Illuminates to indicate the exciter is configured to the mono L, mono R, or mono L+R mode of operation.
15	R/L-R Display X10 Indicator	Illuminates to indicate the autorange feature is enabled to expand the R/L-R display by 10 to provide the resolution required for low level audio monitoring.
16	L/L+R Display X10 Indicator	Illuminates to indicate the autorange feature is enabled to expand the L/L+R display by 10 to provide the resolution required for low level audio monitoring.
17	OVERTEMP Indicator	Illuminates to indicate when the transmitter operating temperature exceeds 57° C (134° F).
18	FOLDBACK Indicator	Illuminates to indicate when the transmitter is in a foldback condition. Foldback is when the transmitter output power is automatically reduced in response to one of the following fault conditions: 1) high reflected power, 2) high forward power, 3) high temperature, or 4) detection of a lightning potential.
19	INTERLOCK Indicator	Illuminates to indicate the internal interlock, external interlock, and remote control fail-safe are closed. The remote control fail-safe must be closed only when the transmitter is configured for remote control operation.
20	REMOTE Indicator	Illuminates to indicate transmitter remote control operations are enabled.
21	CONFLICT Indicator	Illuminates to indicate an incorrect power level is selected for operation into the antenna connected to the transmitter.
22	LIGHTNING Indicator	For AM-1A models, illuminates to indicate a 900 volt or greater potential is present at the transmitter output. For AM-500A models, illuminates to indicate a 650 volt or greater potential is present at the transmitter output. Extinguishes to indicate the presence of normal output voltages.
23	PWM Mute Indicator	Illuminates to indicate the power control PWM signal is muted in response to a fault such as lightning, an exciter fault, a reflected power emergency, an open remote control fail-safe, or an external transmitter mute.
24	Remote Fail-safe Indicator	Illuminates to indicate the remote control unit is enabled.
25	Remote/Local Switch	Controls the transmitter remote control operations. When the switch is operated to remote, remote control operations are enabled. When the switch is operated to local, remote control operations are disabled.
26	Battery OK Indicator	When the battery test switch is depressed, the indicator will: 1) illuminate to indicate the battery is operational or 2) not illuminate to indicate the battery is to be replaced.
27	Battery Test Switch	When depressed, evaluates the controller battery status. The status

©2011 Broadcast Electronics

		is displayed by the battery OK indicator.
28	Pilot On/Off Switch	Enables and disables the stereo pilot signal.
29	Stereo Indicator	Illuminates to indicate the exciter is configured to the stereo mode.
30	Mono L+R Indicator	Illuminates to indicate the exciter is configured to the mono L+R mode.
31	Mono Right Indicator	Illuminates to indicate the exciter is configured to the mono right mode.
32	Mono Left Indicator	Illuminates to indicate the exciter is configured to the mono left mode.
33	Exciter Mode Control Switch	Configures the exciter for stereo, mono L+R, mono left, or mono right operation. The switch is designed to configure the exciter to a different mode of operation each time the switch is depressed. The switch will advance to a mode of operation in the following order: 1) mono left, 2) mono right, 3) mono L+R, and 4) stereo.
34	Stereo Equalization 1 Indicator	Illuminates to indicate the stereo equalization 1 circuit is active.
35	Stereo Equalization 2 Indicator	Illuminates to indicate the stereo equalization 2 circuit is active.
36	Lock Indicator	Illuminates to indicate the exciter is locked to the programmed carrier frequency.
37	Exciter +5V Indicator	Illuminates to indicate the ECU +5V supply is operational.
38	Exciter +15V Indicator	Illuminates to indicate the ECU +15V supply is operational.
39	Exciter -15V Indicator	Illuminates to indicate the ECU -15V supply is operational.
40	Negative Limiter Indicator	Illuminates to indicate the negative limiter circuit is enabled. Factory adjusted to illuminate at approximately 94% negative modulation.

©2011 Broadcast Electronics

TABLE 3-3. POWER MODULE CONTROLS AND INDICATORS

INDEX NO.	NOMENCLATURE	FUNCTION
1	PA 1 RF DRIVE Indicator	Illuminates to indicate RF drive is present at power amplifier.
2	PA 1 FAULT Indicator	Illuminates to indicate a fault has occurred in power amplifier 1.
3	PA 2 RF DRIVE Indicator	Illuminates to indicate RF drive is present at power amplifier 2.
4	PA 2 FAULT Indicator	Illuminates to indicate a fault has occurred in power amplifier 2.
5	MOD PWM DRIVE Indicator	Illuminates to indicate the exciter PWM drive is present at the modulator circuit board.
6	MOD POWER Indicator	Illuminates to indicate DC power is present at the modulator circuit board.
7	MOD FAULT Indicator	Illuminates to indicate a fault has occurred in the modulator circuit board.
8	MOD FUSE Indicator	Illuminates to indicate the modulator circuit board fuse has blown.
9	MOD SAMPLE	Provides a DC voltage sample of the modulator circuit board output. For AM-1A models, the sample will be equal to approximately 6 volts DC at 1100 watts. For AM-500A models, the sample will be equal to approximately 4.2 volts DC at 500 watts. Refer to the factory test data sheets for the exact value.

NOTE ENSURE THE TRANSMITTER IS COMPLETELY INSTALLED PRIOR TO PERFORMING THE FOLLOWING PROCEDURES.
NOTE

3.2 TURN ON.

Operate the transmitter to ON by performing the following procedure.

Ensure the front-panel POWER switch is operated to ON. The ECU and RF power module indicators will illuminate.

Observe the ECU and RF power module indicators. Ensure normal operating conditions are displayed by all indicators. If an indicator displays a fault condition, operate the ac power switch to off and locate the problem.

Select an output power level by depressing the desired power level switch/indicator. The following events will occur:

1. The power level switch indicator will illuminate.

2. The transmitter flushing fan will begin operation.

3. The transmitter output power will be displayed on the FORWARD and REFLECTED power meters.

Operate the FORWARD and REFLECTED power meters by performing the METERING procedures in the following text to observe the transmitter forward and reflected power indications.

©2011 Broadcast Electronics

Adjust the transmitter output power if required by performing the POWER ADJUST procedure presented in the following text.

If remote control operation is desired, operate the local/remote switch on the controller circuit board to remote. This will enable both local and remote operation.

3.3 TURN OFF.

Operate the transmitter to OFF by depressing the OFF switch/indicator to illuminate the switch/indicator. The transmitter will operate to off.

3.4 METERING.

3.4.1 Forward Power

The forward power meter presents forward power indications. To operate the meter, proceed as follows:

1. To monitor low forward power levels, operate the FORWARD POWER meter switch to LOW. For AM-1A models, the LOW scale is from 0 to 300 watts. For AM-500A models, the LOW scale is from 0 to 150 watts.

2. To monitor high forward power levels, operate the FORWARD POWER meter switch to HIGH. For AM-1A models, the HIGH scale is from 0 to 1200 watts. For AM-500A models, the HIGH scale is from 0 to 600 watts.

3. To configure the FORWARD POWER meter to off, operate the FORWARD POWER meter switch to OFF.

3.4.2 Reflected Power

The reflected power meter presents reflected power and ac input indications. To operate the meter, proceed as follows:
1. To monitor low reflected power levels, operate the REFLECTED POWER meter switch to LOW. For AM-1A models, the LOW scale is from 0 to 30 watts. For AM-500A models, the LOW scale is from 0 to 12 watts.
2. To monitor high reflected power levels, operate the REFLECTED POWER meter switch to HIGH. For AM-1A models, the HIGH scale is from 0 to 120 watts. For AM-500A models, the HIGH scale is from 0 to 60 watts.
3. To monitor the ac input voltage, operate the REFLECTED POWER meter switch to VAC.

3.4.3 Power Adjust

The POWER ▲ and ▼ switches adjust the transmitter output power. To adjust the transmitter power, proceed as follows:

1. Depress the POWER ▲ switch to increase the transmitter output power. Observe the transmitter output power indications on the FORWARD and REFLECTED power meters.
The switch will increase power from 10% to 15% of the selected power level.

OR

2. Depress the POWER ▼ switch to decrease the transmitter output power. Observe the transmitter output power indications on the FORWARD and REFLECTED power meters.
The switch will decrease power from 10% to 15% of the selected power level.

3.4.4 Mono/Stereo Operation

To configure the transmitter for monophonic or stereophonic operation, perform the following

©2011 Broadcast Electronics

procedures.

STEREO OPERATION. To configure the transmitter for stereo operations, depress the exciter mode control switch to illuminate the stereo indicator on the stereo circuit board. In addition, the ECU front-panel stereo indicator will illuminate.

MONO OPERATION. The transmitter can be configured to the monophonic mode by:
1) manually selecting the desired mono mode using the stereo circuit board or 2) automatically configuring the transmitter by removing the stereo circuit board. To configure the transmitter for mono operations, proceed as follows:

Mono Operation - Stereo Circuit Board. To configure the transmitter for mono operation using the stereo circuit board, depress the exciter mode control switch to illuminate the mono L+R, mono left, or mono right indicators on the stereo circuit board. In addition, the ECU front-panel MONO indicator will illuminate.

Mono Operation - No Stereo Circuit Board. In the event of a stereo circuit board failure, the transmitter will automatically configure to the monophonic mode when the stereo circuit board is removed from the ECU. To remove the stereo circuit board and configure the transmitter for monophonic operation, proceed as follows:

CAUTION TO PREVENT DAMAGE TO THE TRANSMITTER,
CAUTION ENSURE THE TRANSMITTER PRIMARY POWER IS OPERATED TO OFF BEFORE REMOVING THE STEREO CIRCUIT BOARD.

1. Operate the transmitter primary power to off.

2. Completely remove the stereo circuit board from the ECU. Do not leave the circuit board in the ECU chassis.

3. Refer to Figure 2-5 in SECTION II, INSTALLATION and ensure the monophonic audio channel select jumper is configured for the desired audio channel.

4. If required, adjust the single channel level by referring to SECTION II, INSTALLATION and performing the SINGLE CHANNEL LEVEL procedure.

3.4.5 Pilot Control

The pilot switch on the stereo circuit board controls the pilot tone. Operate the pilot switch to on to enable the pilot tone. Operate the pilot switch to off to disable the pilot tone.

3.4.6 Exciter Monitor Operation

The following text presents procedures for specific exciter monitoring functions. Perform the appropriate procedure for the type of monitor function desired.

- MONO/STEREO INDICATIONS. The MONO and STEREO indicators display the operating mode of the exciter. The MONO indicator will illuminate to indicate when the exciter is configured for mono L+R, mono left, or mono right operation. The STEREO indicator will illuminate to indicate when the exciter is configured for stereo operation.

©2011 Broadcast Electronics

- INPUT SELECTION. Depress the LIRIL+RIL-R MODE switch/indicator to: 1) illuminate the LIR indicator to select left and right channel information or 2) illuminate the L+RIL-R indicator to select L+R and L-R information. The selected parameter will appear on the EXCITER MONITOR display.

- POLARITY SELECTION. Depress the POLARITY switch/indicator to: 1) illuminate the + indicator to select positive peak audio or 2) illuminate the – indicator to select negative peak audio. The selected parameter will appear on the EXCITER MONITOR display.

- X10 AUTORANGE INDICATIONS. The EXCITER MONITOR display is designed with an autorange function to provide the appropriate resolution for the applied signal level. The LIL+R display X10 indicator will illuminate to indicate the display is expanded by 10. The RIL-R display X10 indicator will illuminate to indicate the display is expanded by 10.

3.4.7 Fault Reset

The transmitter monitors several parameters for fault conditions. The RESET indicator will illuminate to indicate a fault when one of the following conditions occur: 1) over-temperature, 2) exciter fault, 3) power supply fault, 4) RF power module fault, 5) high reflected/forward power, 6) reflected power emergency, or 7) lightning. If a power supply fault is encountered, the transmitter ac power must be disconnected to remove the fault condition (refer to POWER SUPPLY FAULT RESET in the following text). Once the fault condition is removed, the fault circuitry must be reset. To reset the fault circuitry, depress the RESET switch. The fault circuitry will be reset.

3.4.8 Power Supply Fault Reset

If a power supply fault is encountered, ac power must be disconnected from the transmitter to clear the fault. To reset a power supply fault, proceed as follows:

1. Operate the front-panel POWER switch to OFF.

2. Operate the front-panel POWER switch to ON.

3. Depress the RESET switch.

3.4.9 Over-Cycle Off

The transmitter controller is equipped with an on/off cycle counter circuit. The circuit is designed to monitor transmitter on/off cycles. If the transmitter is operated on/off seven times within 15 seconds, the transmitter will automatically operate to OFF. The power level or OFF switch/indicators will not respond. To operate the transmitter to ON, proceed as follows:

1. Do not depress any power level switch/indicators or the OFF switch/indicator for approximately 30 seconds. This allows the circuit to reset.

2. Depress the desired power level switch/indicator.

3.4.10 Over-Modulation PWM Mute

The transmitter is protected from modulation levels above 150% by an over-modulation circuit. If the transmitter modulation increases to a level above 150%, the PWM signal will be muted. This will mute the output power and prevent damage to the transmitter power supply modules.

©2011 Broadcast Electronics

3.4.11 Transmitter Monitor

The TRANSMITTER MONITOR is designed to present the operating status of: 1) the exciter, 2) the RF power module, 3) the power supply, 4) the antenna, 5) the remote control, 6) antenna conflict conditions, 7) lightning conditions, 8) interlocks, 9) foldback conditions, and 10) over-temperature conditions. Use the information presented in Table 3-2 to determine the status of the transmitter components and operating conditions.

3.4.12 Battery Test

The battery test and battery OK indicator check the ECU battery backup system. To check the ECU battery, depress the battery test switch. The battery OK indicator will illuminate to indicate an acceptable battery voltage. If the battery OK indicator does not illuminate, replace the battery.

3.4.13 Controller PWM Mute Indicator

The PWM mute indicator illuminates to indicate when the power control PWM signal is muted. The power control PWM signal is muted during: 1) lightning conditions, 2) an exciter fault, 3) reflected power emergency conditions, 4) an open remote control fail-safe, or 5) a transmitter mute control signal.

3.4.14 Controller Remote Failsafe Indicator

The controller remote fail-safe indicator illuminates to indicate the remote control unit is enabled. The indicator will extinguish when the remote control unit is disabled.

3.4.15 Exciter Lock Indicator

The exciter circuit board lock indicator illuminates to indicate when the exciter is locked to the programmed carrier frequency. The indicator will extinguish when the exciter is unlocked from the programmed carrier frequency.

3.4.16 Exciter +5v/+15v/-15v Indicators

The exciter circuit board +5V, +15V, and -15V indicators display the status of the operating potentials from the ECU power supply. The +5V, +15V, and -15V indicators will illuminate to indicate the +5 volt, +15 volt, and -15 volt supplies are operational.

3.4.17 Stereo Equalization Indicators

The stereo circuit board equalization 1 indicator illuminates to indicate when equalization circuit 1 is selected. The stereo circuit board equalization 2 indicator illuminates to indicate when equalization circuit 2 is selected.

3.4.18 RF Power Module Indicators

The RF power module indicators are designed to present the operating status of the power amplifier circuit boards and the modulator circuit board. Use the information presented in Table 3-3 to determine the status of the power amplifier circuit board(s) and the modulator circuit

©2011 Broadcast Electronics

board.

3.4.19 High AC Line Conditions

The transmitter is equipped with a feature to mute the transmitter output power in the event the ac power line increases above 270 volts. If this occurs: 1) the transmitter output power will be muted and 2) no fault or emergency condition will be generated by the transmitter. The transmitter will unmute when the high ac line condition is removed.

©2011 Broadcast Electronics

4 Block Diagrams

This section presents the block diagrams for the Broadcast Electronics AM-1A/AM-500A transmitters.

4.1 OVERALL BLOCK DIAGRAM.

Information on overall AM-1A/AM-500A transmitter is presented in Figure 4-1. Refer to Figure 4-1 for information on overall transmitter block diagram.

4.2 POWER SUPPLY CIRCUITRY OPERATION.

A block diagram of the AM-1A/AM-500A transmitter power supply circuitry is presented in Figure 4-2. Refer to Figure 4-2 for power supply circuitry block diagram.

4.3 POWER SUPPLY CIRCUIT BOARD OPERATION.

A block diagram of the power supply circuit board is presented in Figure 4-3. Refer to Figure 4-3 for power supply circuit board information.

4.4 RF CIRCUITRY OPERATION.

A block diagram of the AM-1A/AM-500A transmitter RF circuitry is presented in Figure 4-4. Refer to Figure 4-4 for transmitter RF circuitry block diagram.

4.5 RF POWER MODULE MODULATOR CIRCUIT BOARD OPERATION.

A block diagram of the RF power module modulator circuit board is presented in Figure 4-5. Refer to Figure 4-5 for modulator circuit board block diagram.

4.6 RF POWER MODULE AMPLIFIER CIRCUIT BOARD OPERATION.

A block diagram of the RF power module amplifier circuit board is presented in Figure 4-6. Refer to Figure 4-6 for amplifier circuit board block diagram.

4.7 CONTROLLER CIRCUIT BOARD OPERATION.

A block diagram of the controller circuit board is presented in Figure 4-7. Refer to Figure 4-7 for controller circuit board block diagram.

©2011 Broadcast Electronics

4.8 EXCITER CIRCUIT BOARD OPERATION.

A block diagram of the exciter circuit board is presented in Figure 4-8. Refer to Figure 4-8 for exciter circuit board block diagram.

4.9 STEREO CIRCUIT BOARD OPERATION.

A block diagram of the stereo circuit board is presented in Figure 4-9. Refer to Figure 4-9 for stereo circuit board block diagram.

©2011 Broadcast Electronics

5 Maintenance

This section provides maintenance information, electrical adjustment procedures, and troubleshooting information for the Broadcast Electronics AM-1A/AM-500A transmitters.

5.1 SAFETY CONSIDERATIONS.

WARNING THE TRANSMITTER CONTAINS MULTIPLE CIRCUIT GROUNDS WITH HIGH AC AND DC POTENTIALS WITH RESPECT TO THE
WARNING CHASSIS WHICH IS AT EARTH POTENTIAL.

DO NOT ENERGIZE THE TRANSMITTER
WARNING WITH TEST EQUIPMENT CONNECTED
TO THE TRANSMITTER OUTPUT NETWORK,
WARNING RF POWER MODULE, RF COMBINER, OR
POWER SUPPLY COMPONENTS.

The AM-1A/AM-500A transmitters contain high voltages and currents. If safety precautions are not practiced, contact with the high voltages and currents could cause serious injury or death. The transmitter is equipped with many built-in safety features, however good judgment, care, and common sense must be practiced to prevent accidents.

In addition to high voltages and currents, the transmitter contain multiple circuit grounds with high ac and dc potentials with respect to the chassis which is at earth potential. The potentials could cause serious injury or death if maintenance personnel simultaneously touch a circuit ground and the chassis. As a result, operation of the transmitter with test equipment connected to transmitter RF power module, bandpass filter, combiner, or power supply components is extremely dangerous and must not be attempted. Therefore, never energize the transmitter with test equipment connected to the transmitter RF power module, bandpass filter, combiner, or power supply components. Test equipment may be connected to the ECU circuit boards from the front of the transmitter using the supplied extender circuit board with power energized. The maintenance procedures presented in this section should be performed only by trained and experienced maintenance personnel.

The transmitter output network chassis design will not allow access to the components without the disconnection of the ac input and the RF output. Never re-connect the AC input or the RF output with the top-panel removed.

5.2 FIRST LEVEL MAINTENANCE.

First level maintenance consists of procedures applied to the equipment to prevent future failures. The procedures are performed on a regular basis and the results recorded in a maintenance log. Preventive maintenance of the transmitter consists of good housekeeping and checking performance levels using the meters and various indicators built into the equipment.

©2011 Broadcast Electronics

5.3 ROUTINE MAINTENANCE.

WARNING NEVER OPEN THE EQUIPMENT UNLESS ALL TRANSMITTER PRIMARY POWER IS

WARNING DISCONNECTED. ENSURE ALL TRANSMITTER PRIMARY POWER IS DISCONNECTED BEFORE ATTEMPTING MAINTENANCE ON ANY AREA WITHIN THE TRANSMITTER.

INSPECTION AND CLEANING. On a regular basis, clean the equipment of accumulated dust using a brush and vacuum cleaner. Inspect the modulator circuit board, RF amplifier circuit boards, and the power supply circuit board for damage caused by components overheating. Overheated components are identified by circuit board discoloration near the component leads. Inspect the circuit boards for loose hardware as required.

CONTROLLER BATTERY. Periodically, the controller battery in the ECU assembly should be checked by depressing the battery test switch on the controller circuit board. The battery test indicator will illuminate to indicate the battery is operational. If the battery test indicator fails to illuminate, the battery must be replaced. A good-quality Alkaline battery is recommended for replacement. Typically, it is recommended the controller battery be replaced annually.

AIR FILTER. The transmitter is equipped with a screen type air filter. The screen filter is designed to be removed and cleaned using a brush and vacuum. Check the filter approximately once a week. Remove dirt from the filter as-required by: 1) removing the filter from the chassis and 2) cleaning the filter using a brush and vacuum.

FLUSHING FAN. Inspect the transmitter flushing fan for dust accumulation and periodically clean the fan using a brush and vacuum cleaner. Do not use compressed air and an air gun. The fan is cooled by air passing around the motor. If dust is allowed to accumulate on the motor, the ambient air temperature will increase due to restricted air flow. When the ambient air temperature increases, the fan motor bearing lubricant will gradually vaporize and bearing failure will occur.

It is recommended the flushing fan mounting hardware be periodically checked. The flushing fan is equipped with sealed bearings which do not permit lubrication. If a bearing fails, the motor must be replaced.

SPARK GAP. The output network chassis is equipped with a spark gap. The spark gap is provided to safely conduct lightning potentials appearing at the transmitter output to ground. Inspect the spark gap annually to ensure the gap is operational.

5.4 SECOND LEVEL MAINTENANCE.

Second level maintenance consists of procedures required to adjust the transmitter circuitry or restore the transmitter to operation after a fault has occurred. The procedures consists of electrical adjustments, troubleshooting, and component replacement procedures.

©2011 Broadcast Electronics

WARNING NEVER OPEN THE EQUIPMENT UNLESS ALL TRANSMITTER PRIMARY POWER IS

WARNING DISCONNECTED. ENSURE ALL TRANSMITTER PRIMARY POWER IS DISCONNECTED BEFORE ATTEMPTING MAINTENANCE ON ANY AREA WITHIN THE TRANSMITTER.

The maintenance philosophy for the transmitter consists of isolating a problem to a specific area. Once the specific area is located, subsequent troubleshooting using the information in the following text will assist in problem isolation to a replaceable assembly or component. If required, the assembly may be: 1) returned to the factory for repair or exchange or 2) repaired locally.

5.5 OVERALL TRANSMITTER ELECTRICAL ADJUSTMENTS.

WARNING NEVER OPEN THE EQUIPMENT UNLESS ALL TRANSMITTER PRIMARY POWER IS

WARNING DISCONNECTED. ENSURE ALL TRANSMITTER PRIMARY POWER IS DISCONNECTED BEFORE ATTEMPTING MAINTENANCE ON ANY AREA WITHIN THE TRANSMITTER.

TRANSMITTER FREQUENCY RE-PROGRAMMING.

The AM-1A/AM-500A transmitters are configured for a specific frequency when shipped from the factory. The transmitter is equipped with several frequency dependent parts and circuits. Due to the frequency dependent parts, frequency dependent circuits, and specialized procedures, the transmitter cannot be reprogrammed for a different frequency in the field. If the transmitter is required to be programmed for a different frequency, contact the Broadcast Electronics Customer Service department.

5.6 TROUBLESHOOTING.

WARNING THE TRANSMITTER CONTAINS MULTIPLE CIRCUIT GROUNDS WITH HIGH AC AND

WARNING DC POTENTIALS WITH RESPECT TO THE CHASSIS WHICH IS AT EARTH POTENTIAL.

©2011 Broadcast Electronics

WARNING DO NOT ENERGIZE THE TRANSMITTER WITH TEST EQUIPMENT CONNECTED TO

WARNING THE TRANSMITTER BANDPASS FILTER, RF POWER MODULE, COMBINER, OR POWER SUPPLY COMPONENTS.

The AM-1A/AM-500A transmitters are equipped with extensive indicator and meter circuitry to allow the operator to isolate problems to a specific area within the transmitter. Due to the hazardous voltages and currents contained in the equipment, operation of the transmitter with test equipment connected to the transmitter RF power module, bandpass filter, combiner, or power supply components is extremely dangerous and must not be attempted. Test equipment may be connected to the ECU circuit boards from the front of the transmitter using the supplied extender circuit board with power energized.
Therefore, the transmitter indicators and meters must be used to isolate a problem to a specific area.

TRANSMITTER INDICATORS. The following text presents a description of the transmitter indicators and typical meter indications. Refer to the following text as required to determine the function of a specific indicator.

TABLE 5-1. AM-1A/AM-500A INDICATORS
(Sheet 1 of 3)

ASSEMBLY	INDICATOR FUNCTION
ECU ASSEMBLY	
TRANSMITTER MONITOR	
EXCITER	GREEN DISPLAY – Indicates normal exciter operation. RED DISPLAY – Indicates no exciter RF drive or PWM output.
POWER MODULES	GREEN DISPLAY – Indicates the RF power module is operating normally. YELLOW DISPLAY – Indicates the RF power modules are removed from the transmitter for maintenance. RED DISPLAY – Indicat4es a modulator or power amplifier circuit board fault in the RF power module.
POWER SUPPLY	GREEN DISPLAY – Indicates normal power supply operation. RED DISPLAY – Indicates an open loop or over-voltage fault in the power supply module. YELLOW DISPLAY – Indicates the power supply is removed from the transmitter.
ANTENNA VSWR	GREEN DISPLAY – Indicates a normal antenna load. YELLOW DISPLAY – Indicates a VSWR condition of 1.2:1 RED DISPLAY – Indicates a high reflected/forward power condition. For AM-1A models, a high reflected power condition is equal to 40 watts of reflected power. For AM-500A models, a high reflected power condition is equal to 20 watts of reflected power. For both models, a high forward power condition is equal to a forward RF output power greater than 20% of the nominal RF output. When this condition occurs, the transmitter output power will foldback.

©2011 Broadcast Electronics

	FLASHING RED DISPLAY – Indicates a reflected power emergency condition. For AM-1A models, a reflected power emergency condition is equal to 200 watts of reflected power. For AM-500A models, a reflected power emergency condition is equal to 100 watts of reflected power. When this condition occurs, the transmitter will operate to off.
REMOTE	Illuminates to indicate transmitter remote control operations are enabled. Extinguishes to indicate transmitter remote control operations are disabled: 1) using the remote/local switch on the controller circuit board or 2) due to a fault in the remote control unit.
CONFLICT	Illuminates to indicate an incorrect power level is selected for operation into the antenna connected to the transmitter.
LIGHTNING	For AM-1A models, illuminates to indicate a 900 volt or greater potential is present at the transmitter output. For AM-500A models, illuminates to indicate a 650 volt or greater potential is present at the transmitter output.
INTERLOCK	Illuminates to indicate all internal and external interlocks are closed.
FOLDBACK	Illuminates to indicate when the transmitter is in a foldback condition. Foldback is when the transmitter output power is automatically reduced in response to one of the following fault conditions: 1) high reflected power, 2) high forward power, 3) high temperature, or 4) detection of a lightning potential.
OVERTEMP	Illuminates to indicate when the transmitter operating temperature exceeds 57˚C or (134˚F).
RESET	Illuminates to indicate one or more of the following transmitter faults have occurred: 1) over-temperature, 2) exciter fault, 3) power supply fault, 4) RF power module fault, 5) high reflected power, 6) reflected power emergency, or 7) lightning. Once the fault condition is removed, the fault circuitry must be reset.
CONTROLLER CIRCUIT BOARD	
PWM Mute	Illuminates to indicate the power control PWM signal is muted in response to a fault such as lightning, an exciter fault, a reflected power emergency, an open remote control fail-safe, an external transmitter mute, lightning, or high reflected or forward power.
Remote Fail-safe	Illuminates to indicate the remote control unit is enabled.
Battery OK	When the battery test switch is depressed, the indicator will: 1) illuminate to indicate the battery is operational or 2) not illuminate to indicate the battery is to be replaced.
STEREO CIRCUIT BOARD	
Stereo Equalization 1	Illuminates to indicate stereo equalization circuit 1 is active.
Stereo Equalization 2	Illuminates to indicate stereo equalization circuit 2 is active.
EXCITER CIRCUIT BOARD	
Exciter Lock	Illuminates to indicate the exciter is locked to the programmed carrier frequency.
Exciter +5V	Illuminates to indicate the ECU +5V supply is operational.
Exciter +15V	Illuminates to indicate the ECU +15V supply is operational.
Exciter -15V	Illuminates to indicate the ECU -15V supply is operational.
RF POWER MODULE	
PA 1 RF DRIVE	Illuminates to indicate RF drive from the exciter circuit board is present at power amplifier 1.

©2011 Broadcast Electronics

PA 1 FAULT	Illuminates to indicate a fault has occurred in power amplifier 1.
PA 2 RF DRIVE	Illuminates to indicate RF drive from the exciter circuit board is present at power amplifier 2.
PA 2 FAULT	Illuminates to indicate a fault has occurred in power amplifier 2.
MOD PWM DRIVE	Illuminates to indicate the PWM drive signal from the exciter is present at the modulator circuit board.
MOD POWER	Illuminates to indicate DC power from the power supply circuit board is present at the modulator circuit board.
MOD FAULT	Illuminates to indicate a modulator, fuse, or power supply fault has occurred in the modulator circuit board.
MOD FUSE	Illuminates to indicate the modulator circuit board fuse has blown.

TRANSMITTER TROUBLESHOOTING PROCEDURES. Table 5-2 presents overall troubleshooting information for the AM-1A/AM-500A transmitters. Refer to Table 5-2 to isolate the problem to a specific assembly. Once the trouble is isolated, refer to the applicable modular section of this manual for the theory of operation and schematic diagrams to assist in problem resolution.

TRANSMITTER COMPONENT LOCATIONS. Figures 5-1 and 5-2 present transmitter component locations. Refer to Figures 5-1 and 5-2 as required during the troubleshooting procedures to locate components within the transmitter.

TABLE 5-2. AM-1A/AM-500A TROUBLESHOOTING
(Sheet 1 of 4)

SYMPTOM	CIRCUITRY TO CHECK
NO OUTPUT POWER NO NORMAL/FAULT INDICATIONS	1. Check the AC line voltage using the reflected power/AC voltage meter. If no line voltage is present, check circuit breaker CB1. 2. Check the ±15 volt and +5 volt indicators on the exciter circuit board. If no indicators are illuminated, check the ECU power supply.
NO OUTPUT POWER NORMAL INDICATIONS NO CONTROL OPERATIONS	1. Transmitter operated to off due to 7 on/off cycles within 15 seconds. Operate the transmitter to on as follows: 1) do not depress any controller switch/indicators for approximately 30 seconds and 2) depress the desired power level switch/indicator. 2. Refer to POWER SUPPLY troubleshooting and troubleshoot the power supply circuit board for no 120 Hz signal output.
RED TRANSMITTER MONITOR EXCITER INDICATION	1. Check the lock indicator on the exciter circuit board. If the lock indicator is not illuminated, refer to ECU troubleshooting and troubleshoot the exciter circuit board for lock indicator extinguished. 2. Remove the stereo circuit board and perform the following: 1) depress the RESET switch and 2) initiate transmitter operation. If the transmitter will not operate, refer to ECU troubleshooting and troubleshoot the exciter circuit board. If the transmitter operates, refer to ECU troubleshooting and troubleshoot the stereo circuit board.

©2011 Broadcast Electronics

YELLOW TRANSMITTER MONITOR POWER MODULE INDICATION	1. Indicates the RF power module is removed from the transmitter.
RED TRANSMITTER MONITOR POWER MODULE FAULT INDICATION RED RF POWER MODULE FAULT INDICATION	1. Refer to RF POWER MODULE troubleshooting and troubleshoot the RF power module. 2. Visually inspect the RF power module combiner for discolored components.
YELLOW TRANSMITTER MONITOR POWER SUPPLY INDICATION	1. Indicates the power supply module is removed from transmitter.
RED TRANSMITTER MONITOR POWER SUPPLY INDICATION	1. Check for an over-temperature condition by inspecting the fan and the filter. 2. Refer to POWER SUPPLY MODULE troubleshooting and troubleshoot the power supply module.
YELLOW TRANSMITTER MONITOR ANTENNA INDICATION	1. Check the antenna and phasor equipment. 2. Refer to DIRECTIONAL COUPLER/LIGHTNING DETECTION/LIGHTNING PROTECTION CIRCUIT BOARD troubleshooting and troubleshoot the directional coupler circuit board.
RED TRANSMITTER MONITOR ANTENNA INDICATION	1. Check the antenna and phasor equipment. 2. Refer to DIRECTIONAL COUPLER/LIGHTNING DETECTION/LIGHTNING PROTECTION CIRCUIT BOARD troubleshooting and troubleshoot the directional coupler circuit board.
FLASHING RED TRANSMITTER MONITOR ANTENNA INDICATION	1. Check the antenna and phasor equipment. 2. Visually inspect the spark gap for a short circuit condition. 3. Check the lightning protection circuit board for a short circuit condition.
INTERLOCK INDICATOR EXTINGUISHED WHEN IN THE REMOTE CONTROL MODE	1. Operate remote/local switch to local. A. If the interlock indicator illuminates, ensure a +5 volt signal is applied to remote fail-safe input TB1-28 on the ECU rear-panel when the remote control unit is enabled. 1. If the +5 volt signal is not present, troubleshoot the remote control unit. 2. If the +5 volt signal is present, check Q48 and U56 on the controller circuit board. B. If the interlock indicator is extinguished, check the cabinet and the external interlocks.
CONFLICT INDICATION	1. Ensure a +5 volt status signal from the selected antenna is applied to the antenna A, B, or C input on the ECU rear-panel. 2. Ensure the correct transmitter power level is selected for operation into the antenna.

©2011 Broadcast Electronics

	3. Check the antenna interlock circuit programming on the controller circuit board. 4. Refer to ECU troubleshooting and troubleshoot the controller circuit board for a conflict indication.
NO OUTPUT POWER LIGHTNING INDICATOR ILLUMINATED	1. Transmitter operated to off due to 7 on/off cycles with 15 seconds. Operate the transmitter to on as follows: 1) do not depress any controller switch/indicators for approximately 30 seconds and 2) depress the desired power level switch/indicator. 2. Check Q401 on the lightning detection circuit board.
RF DRIVE INDICATORS EXTINGUISHED ON THE POWER MODULE	1. Check for RF drive output on the ECU motherboard at P101-7. If no RF drive is present, refer to ECU troubleshooting and troubleshoot the exciter circuit board. 2. Check bridge rectifiers D7 and D9 on the power supply module for the power block. 3. Refer to RF POWER MODULE troubleshooting and troubleshoot the RF power module.
NORMAL OUTPUT POWER LIGHTNING INDICATOR ILLUMINATED	1. Indicates the presence of lightning at the output of transmitter. Depress the RESET switch to reset the indicator.
INTERLOCK INDICATOR EXTINGUISHED	1. Ensure a +5 volt signal is applied to external interlock input TB1-29 on the ECU rear panel.
OVERTEMP INDICATOR ILLUMINATED	1. Ensure the transmitter air filter is clean. 2. Check the transmitter fan. 3. Ensure the transmitter exhaust area is clear of obstructions.
MISSING NORMAL/FAULT INDICATIONS FOR THE POWER MODULE	1. Check fuses F1 and F2. 2. Check power transformer T1.
NO L+R MODULATION ACTIVITY DURING MONO OPERATION	1. Ensure audio is present at TB2-25 through TB2-30 on the ECU rear panel. 2. Check for audio at J101-29 through J101-31 and J101-36/J101-37 on the ECU motherboard. If no audio is present, check the filter components on the ECU motherboard. 3. Refer to ECU troubleshooting and troubleshoot the exciter circuit board.
NO L+R MODULATION ACTIVITY DURING STEREO OPERATION	1. Ensure audio is present at TB2-25 through TB2-30 on the ECU rear panel. 2. Check for audio at J101-29 through J101-31 and J101-36/J101-37 on the ECU motherboard. If no audio is present, check the filter components on the ECU motherboard. 3. Refer to ECU troubleshooting and troubleshoot the exciter circuit board.
LOW DEMODULATOR LEFT CHANNEL MODULATION LEVEL WITH LOW EXCITER	1. Refer to ECU troubleshooting and troubleshoot the exciter circuit board.

©2011 Broadcast Electronics

MONITOR LEFT CHANNEL MODULATION LEVEL	
LOW DEMODULATOR RIGHT CHANNEL MODULATION LEVEL WITH LOW EXCITER MONITOR RIGHT CHANNEL MODULATION LEVEL	1. Refer to ECU troubleshooting and troubleshoot the exciter circuit board.
LOW DEMODULATOR LEFT CHANNEL MODULATION LEVEL WITH NORMAL EXCITER MONITOR LEFT CHANNEL MODULATION LEVEL	1. Refer to ECU troubleshooting and troubleshoot the stereo circuit board.
LOW DEMODULATOR RIGHT CHANNEL MODULATION LEVEL WITH NORMAL EXCITER MONITOR RIGHT CHANNEL MODULATION LEVEL	1. Refer to ECU troubleshooting and troubleshoot the stereo circuit board.
PWM DRIVE INDICATOR EXTINGUISHED ON THE RF POWER MODULE	1. Check for a 0V to 15V PWM output at the anode of D6, D8, D10, D12, D14, D16, D18, D20, D47, and D49 on the exciter circuit board. A. If the PWM output is not present, refer to ECU troubleshooting and troubleshoot the exciter circuit board. B. If the PWM output is present, refer to RF POWER MODULE troubleshooting and troubleshoot the RF power module.
MOD PWR INDICATORS EXTINGUISHED ON THE POWER AMPLIFIER MODULE	1. Check for a power control PWM signal at the drain of Q22 on the controller circuit board. A. If the PWM signal is not present, refer to the ECU section and troubleshoot the controller circuit board for no power control PWM signal. B. If the PWM output is present, check for a LOW at Q13 on the controller circuit board. 1. If the LOW at Q13 is not present, refer to the ECU section and troubleshoot the controller circuit board for no transmitter on signal. 2. If the LOW at Q13 is present, refer to POWER SUPPLY troubleshooting and troubleshoot the power supply for no MOD POWER indicator.
REFLECTED POWER METER FLUCTUATES WITH MODULATION	1. Narrow-band antenna. Contact the Broadcast Electronics Customer Service Department.
FORWARD POWER METER FLUCTUATES WITH MODULATION	1. Enable the high-pass filter on the exciter circuit board.

©2011 Broadcast Electronics

5.7 POWER SUPPLY CIRCUIT BOARD.

WARNING WARNING

THE TRANSMITTER CONTAINS MULTIPLE CIRCUIT GROUNDS WITH HIGH AC AND DC POTENTIALS WITH RESPECT TO THE CHASSIS WHICH IS AT EARTH POTENTIAL.

WARNING WARNING

DO NOT ENERGIZE THE TRANSMITTER WITH TEST EQUIPMENT CONNECTED TO THE TRANSMITTER BANDPASS FILTER, RF POWER MODULE, COMBINER, OR POWER SUPPLY COMPONENTS.

WARNING WARNING

NEVER RE-CONNECT AC POWER OR THE RF OUTPUT TO THE OUTPUT NETWORK CHASSIS WITH THE TOP-PANEL REMOVED.

SAFETY CONSIDERATIONS.

The AM-1A/AM-500A transmitters are equipped with extensive indicator and meter circuitry to allow the operator to isolate problems to a specific area within the transmitter. Due to the hazardous voltages and currents contained in the equipment, operation of the transmitter with test equipment connected to the transmitter RF power module, bandpass filter, combiner, or power supply components is extremely dangerous and must not be attempted. Test equipment may be connected to the ECU circuit boards from the front of the transmitter using the supplied extender circuit board with power energized.
Therefore, the transmitter indicators and meters must be used to isolate a problem to a specific area.

REMOVING/INSTALLING A POWER SUPPLY CIRCUIT BOARD.

The power supply circuit board is removed by disconnecting three connectors, loosening the mounting hardware, and sliding the circuit board from the mounting pins. To remove or install the power supply circuit board, proceed as follows:

WARNING WARNING

DISCONNECT ALL TRANSMITTER PRIMARY POWER BEFORE PROCEEDING.

Disconnect all transmitter primary power.

To remove the power supply circuit board, proceed as follows:

1. Refer to Figure 5-1 and locate the power supply circuit board.

©2011 Broadcast Electronics

2. Disconnect connectors P1, P2, and P3 on the circuit board assembly.

3. Loosen the power supply circuit board mounting hardware.

4. Lift the circuit board from the mounting pins and remove the circuit board from the chassis.

TROUBLESHOOTING PROCEDURES.

The power supply module troubleshooting procedures are presented in Table 5-3. During the execution of the troubleshooting information, perform all the procedures for a symptom. The symptom may contain multiple component failures. Once the trouble is isolated, refer to the circuit board theory of operation in SECTION IV and the schematic diagrams to assist in problem resolution.

©2011 Broadcast Electronics

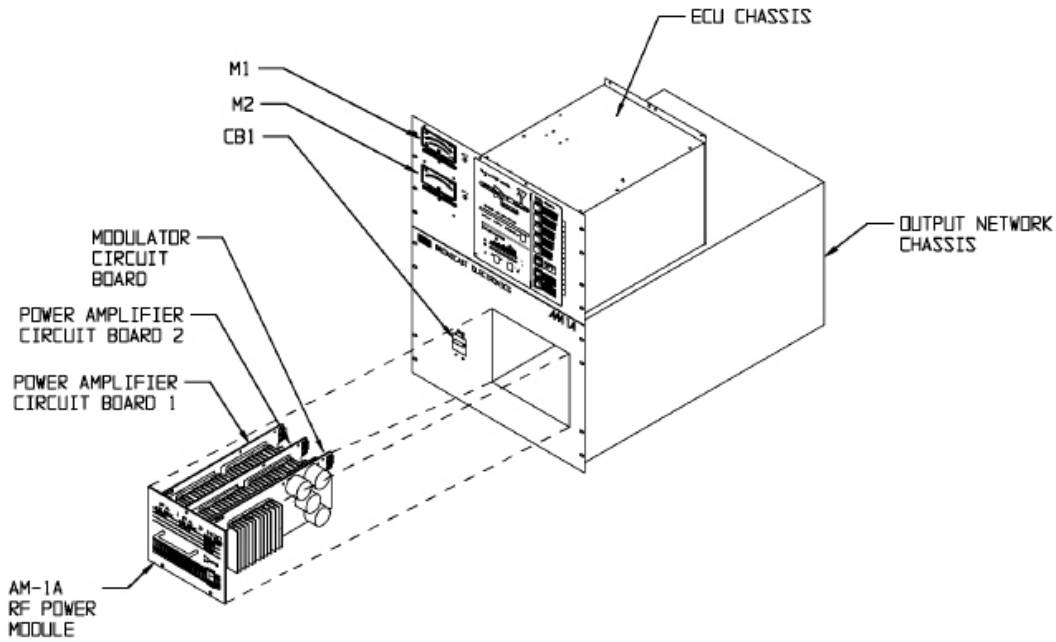

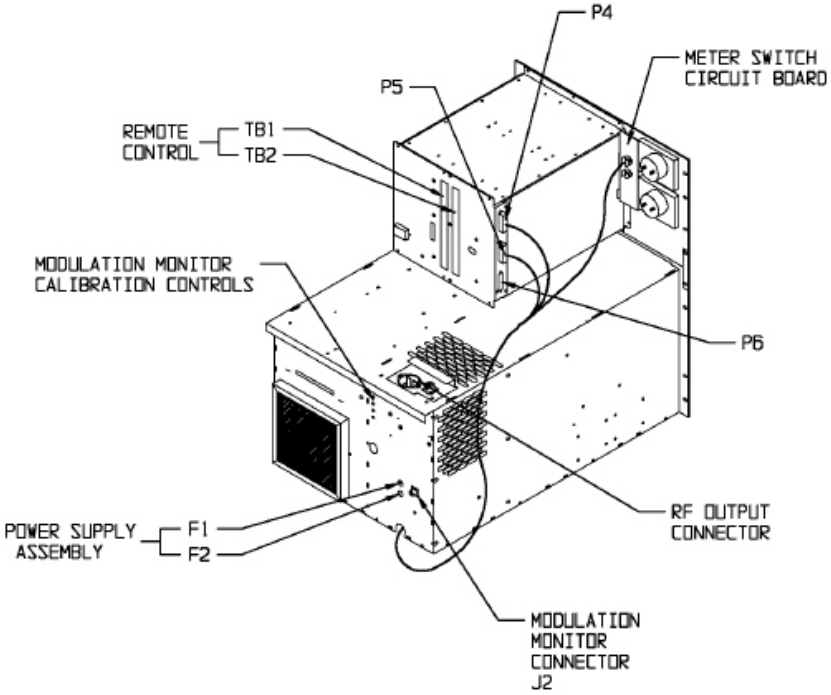

COPYRIGHT © 1996 BROADCAST ELECTRONICS, INC

597-1112-15

FIGURE 5-1. AM-1A/AM-500A COMPONENT LOCATOR (SHEET 1 OF 2)

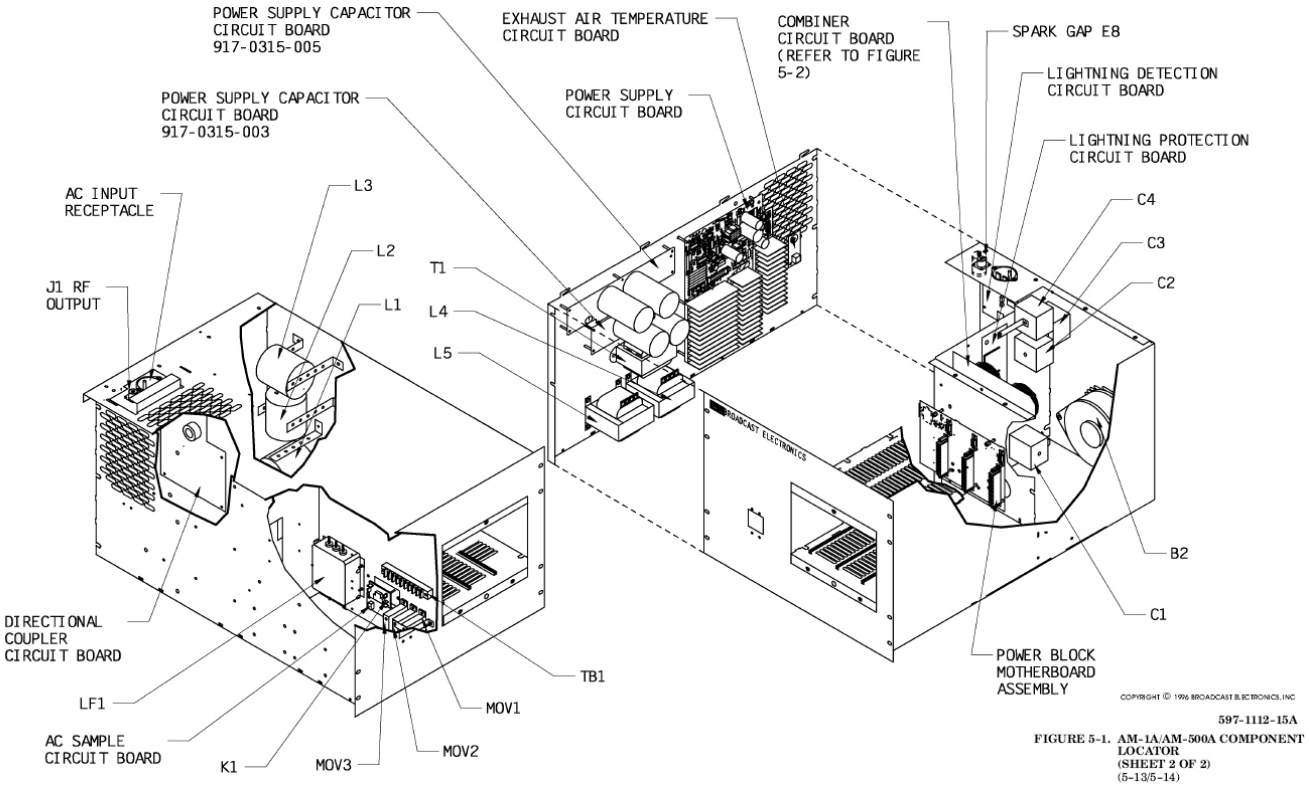

FIGURE 5-1. AM-1A/AM-500A COMPONENT LOCATOR (SHEET 2 OF 2)

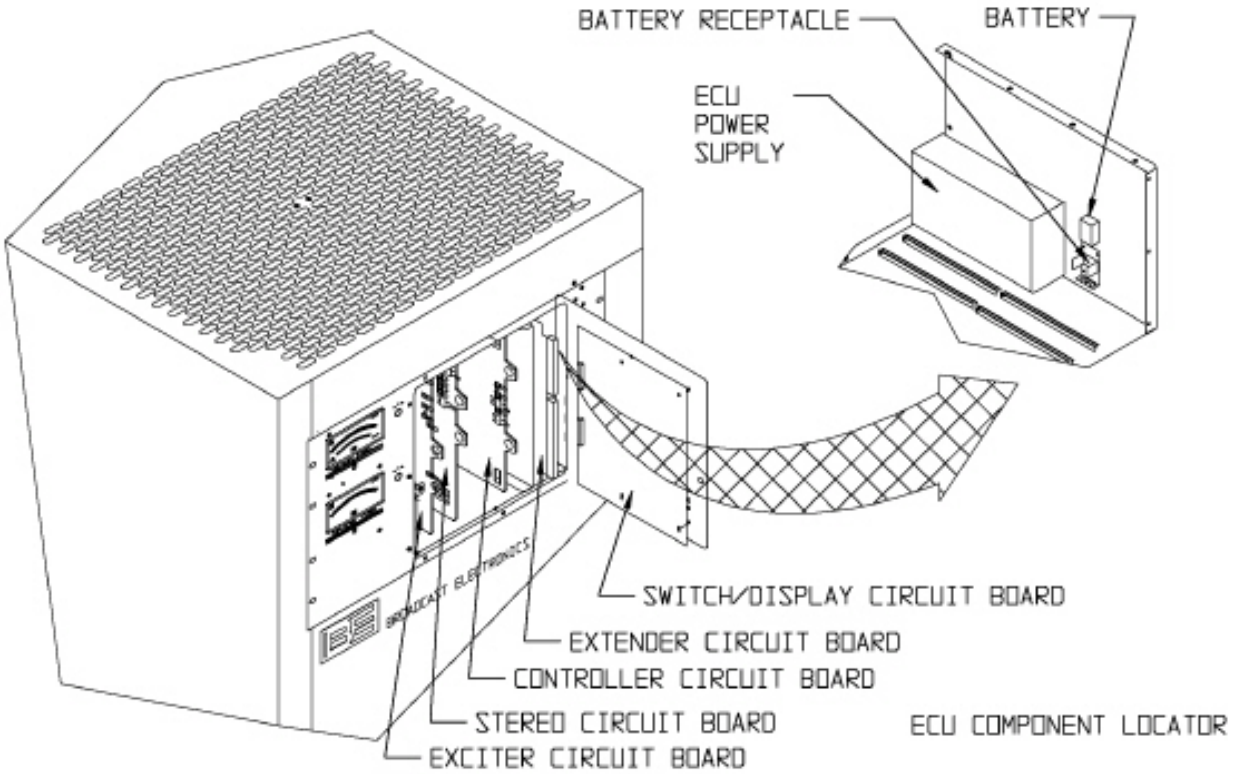

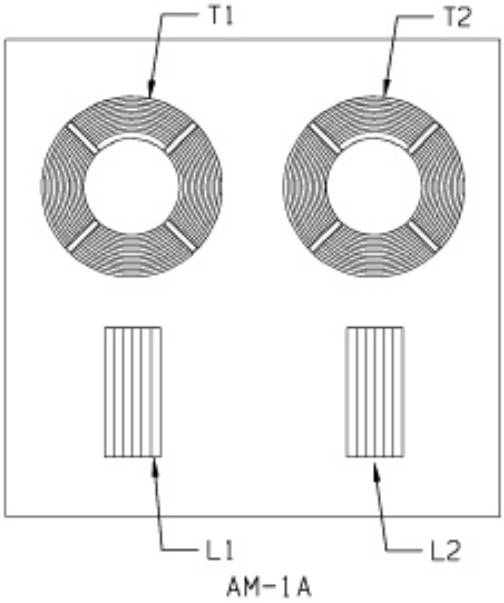

COPYRIGHT © 1996 BROADCAST ELECTRONICS, INC

597-1112-16

FIGURE 5-2. ECU/COMBINER COMPONENT LOCATOR

TABLE 5-3. POWER SUPPLY MODULE TROUBLESHOOTING

SYMPTOM	CIRCUITRY TO CHECK
RED POWER SUPPLY INDICATION	1. Check transistors Q21 and Q22 as follows: a. Using a digital voltmeter, operate the voltmeter to diode check. On Q21, place the negative lead on the drain (center pin) and the positive lead on the source. i. If the voltmeter indicates a non-shorted condition, check transistor Q23. ii. If the voltmeter indicates a shorted condition, proceed as follows: 1. On Q21, place the negative lead on the drain (center pin) and the positive lead on the gate and record the voltmeter indication. 2. On Q22, place the negative lead on the drain and the positive lead on the gate and record the voltmeter indication. 3. The transistor with the lowest voltage is defective. 2. Check transistor Q23 as follows: a. Using a digital voltmeter, operate the voltmeter to diode check and troubleshoot transistor Q23 as follows: i. Place the negative lead on the drain and the positive lead on the gate and determine if a short circuit condition is present. ii. Place the negative lead on the drain and the positive lead on the source and determine if a short circuit condition is present. iii. If a short circuit condition is present, defective Q23. 3. Visually inspect crowbar resistor R72. 4. Check SCRs D13/D14 and diodes D15, D16, and D17 for a short circuit condition. 5. Replace all blown fuses on the circuit board.
NO 120 Hz SIGNAL OUTPUT	1. Check for a 120 Hz square-wave pulse at the source of transistor Q55 on the controller circuit board. a. If a 120 Hz signal is present, defective Q55 on the controller circuit board. b. If a 120 Hz signal is not present, defective U2 on the power supply circuit board. 2. Re-install the power supply circuit board and operate the transmitter. If the circuit board remains defective, contact The Broadcast Electronics Customer Service Department.
MOD PWR INDICATOR EXTINGUISHED	1. Check U7, U9A, U9B, U9C, U9D, Q9, and Q21.

5.8 RF POWER MODULE.

WARNING THE TRANSMITTER CONTAINS MULTIPLE CIRCUIT GROUNDS WITH HIGH AC AND

WARNING DC POTENTIALS WITH RESPECT TO THE CHASSIS WHICH IS AT EARTH POTENTIAL.

©2011 Broadcast Electronics

WARNING DO NOT ENERGIZE THE TRANSMITTER WITH TEST EQUIPMENT CONNECTED TO THE TRANSMITTER BANDPASS FILTER, RF POWER MODULE, COMBINER, OR POWER SUPPLY COMPONENTS.

WARNING

WARNING NEVER RE-CONNECT AC POWER OR THE RF OUTPUT TO THE OUTPUT NETWORK CHASSIS WITH THE TOP-PANEL REMOVED.

WARNING

SAFETY CONSIDERATIONS.

The AM-1A/AM-500A transmitters are equipped with extensive indicator and meter circuitry to allow the operator to isolate problems to a specific area within the transmitter. Due to the hazardous voltages and currents contained in the equipment, operation of the transmitter with test equipment connected to the transmitter RF power module, bandpass filter, combiner, or power supply components is extremely dangerous and must not be attempted. Test equipment may be connected to the ECU circuit boards from the front of the transmitter using the supplied extender circuit board with power energized.
Therefore, the transmitter indicators and meters must be used to isolate a problem to a specific area.

RF POWER MODULE ASSEMBLY PROCEDURE.

In the event of a failure in an RF power module, the module will be required to be disassembled. The module must be properly re-assembled to prevent circuit board and connector misalignment. To re-assemble an RF power module, proceed as follows:

1. Locate the PA 2 circuit board and install the hex standoffs in the four locations at the rear of the circuit board.

2. Locate the PA 1 circuit board and install the front panel mounting bracket using the four Phillips-head screws. Do not secure the screws at this time. Repeat the procedure for the PA2 circuit board and the modulator circuit board.

3. Install the PA 1 circuit board in the PA 1 location on the RF power module front panel. Secure the circuit board bracket to the front panel using the hex nuts. Repeat the procedure for the PA 2 and modulator circuit boards.

4. Place the RF power module on a square and flat surface such as a table with the top of the module facing up.

5. Place the module front panel flush with the edge of the table and align the circuit boards as follows:

A. Move the PA 1 circuit board until the front of the circuit board is flush with the RF module front panel and the top edge of the circuit board is straight.

B. Secure the two Phillips-head screws which mount the circuit board to the bracket.

C. Repeat the procedure for the PA 2 and modulator circuit boards.

6. Rotate the module and repeat the alignment procedure for the bottom circuit board bracket screws. Secure the two Phillips-head screws mounting the circuit board to the bracket when each circuit board is properly aligned.

©2011 Broadcast Electronics

7. Install the hardware securing the PA 1 circuit board and the modulator circuit board to the standoffs.

RF POWER MODULE EXCHANGE PROGRAM.

If an RF power module is determined to be defective, Broadcast Electronics has established an RF power module exchange program. The program allows the customer to exchange a defective module for a re-conditioned module. Terms of the program are available from the Broadcast Electronics RF Customer Service Department. If an RF power module is determined to be defective, troubleshoot the module or contact the Broadcast Electronics RF Customer Service department for terms of the module exchange program.

TROUBLESHOOTING PROCEDURES.

The RF power module troubleshooting procedures are presented in Table 5-4. During the execution of the procedures, perform all troubleshooting procedures for a symptom. The symptom may contain multiple component failures. Once the trouble is isolated, refer to the circuit board theory of operation in SECTION IV and the schematic diagrams to assist in problem resolution.

TABLE 5-4. RF POWER MODULE TROUBLESHOOTING (Sheet 1 of 2)

SYMPTOM	CIRCUITRY TO CHECK
RF DRIVE INDICATOR EXTINGUISHED OR FLICKERING OR FAULT INDICATOR ILLUMINATED	1. Using a digital voltmeter, operate the voltmeter to diode check and determine a reference voltage for the transistors on the non-defective power amplifier circuit board as follows: a. Place the negative lead on the drain of Q1 (center pin) and the positive lead on the gate and determine the voltage. The voltage using a Fluke 77 meter = .45. b. Place the negative lead on the drain of Q1 and the positive lead on the source and determine the voltage. The voltage using a Fluke 77 meter =.45. 2. Using the voltmeter as described in the preceding step, measure the drain-to-gate and drain-to-source voltage of transistor Q1 on the defective power amplifier circuit board. a. If the voltage is greater than $\pm$0.1 volt of the reference, defective Q1, Q3, and Q5. b. If the voltage is equal to the reference, repeat the preceding step for transistor Q2 on the defective power amplifier circuit board. 3. Using a digital voltmeter, operate the voltmeter to diode check and troubleshoot transistor Q3 as follows: a. Place the negative lead on the drain of Q3 (center pin) and the positive lead on the gate and determine if a short circuit condition is present. b. Place the negative lead on the drain of Q3 and the positive lead on the source and determine if a short circuit condition is present. c. If a short circuit condition is present, defective Q3. 4. Repeat the procedure for transistors Q4, Q5, and Q6. 5. Visually inspect regulator U1 for broken leads. 6. Check and replace all blown fuses on the circuit board.

©2011 Broadcast Electronics

MOD PWM DRIVE INDICATOR EXTINGUISHED AND FAULT OR FUSE INDICATOR ILLUMINATED	1. Refer to RF DRIVE INDICATOR EXTINGUISHED OR FLICKERING OR FAULT INDICATOR ILLUMINATED in the preceding text and troubleshoot the power amplifier circuit board. 2. If no defective circuitry is located on the power amplifier circuit board, refer to FAULT OR FUSE INDICATOR ILLUMINATED in the following text and troubleshoot the modulator circuit board.
FAULT OR FUSE INDICATOR ILLUMINATED	1. Visually inspect regulator U10 on the modulator circuit board for broken leads. 2. Using a digital voltmeter, operate the voltmeter to diode check and determine a reference voltage for the transistors on a non-defective modulator circuit board as follows: a. Place the negative lead on the drain of Q1 (center pin) and the positive lead on the gate and determine the voltage. The voltage using a Fluke 77 meter = 1.2V. b. Place the negative lead on the drain of Q1 and the positive lead on the source and determine the voltage. The voltage using a Fluke 77 meter = 0.46V. 3. Using the voltmeter as described in the preceding step, measure the drain-to-gate and drain-to-source voltage of transistor Q1 on the defective modulator circuit board. A. If the voltage is greater than ±0.1 volt of the reference, proceed as follows: 1. Remove the wire from terminal E1. 2. Using the voltmeter as described in the preceding text, measure the drain-to-gate and drain-to-source voltage of transistor Q1 on the defective modulator circuit board. B. If the voltage at Q1 is greater than ±0.1V of the reference, defective Q1. C. If the voltage at Q1 is equal to the reference, defective Q2. 4. Replace all blown fuses on the circuit board. 5. Re-install the modulator circuit board and install the RF module in the transmitter. If the modulator remains defective, replace U2 and U13. 6. If the modulator remains defective, contact the Broadcast Electronics Customer Service Department.

5.9 DIRECTIONAL COUPLER/LIGHTNING DETECTION/LIGHTNING PROTECTION CIRCUIT BOARDS.

WARNING THE TRANSMITTER CONTAINS MULTIPLE CIRCUIT GROUNDS WITH HIGH AC AND
WARNING DC POTENTIALS WITH RESPECT TO THE CHASSIS WHICH IS AT EARTH POTENTIAL.

WARNING DO NOT ENERGIZE THE TRANSMITTER WITH TEST EQUIPMENT CONNECTED TO
WARNING THE TRANSMITTER BANDPASS FILTER,

©2011 Broadcast Electronics

RF POWER MODULE, COMBINER, OR POWER SUPPLY COMPONENTS.

WARNING NEVER RE-CONNECT AC POWER OR THE RF OUTPUT TO THE OUTPUT NETWORK

WARNING CHASSIS WITH THE TOP-PANEL REMOVED.

SAFETY CONSIDERATIONS.

The AM-1A/AM-500A transmitters are equipped with extensive indicator and meter circuitry to allow the operator to isolate problems to a specific area within the transmitter. Due to the hazardous voltages and currents contained in the equipment, operation of the transmitter with test equipment connected to the transmitter RF power module, bandpass filter, combiner, or power supply components is extremely dangerous and must not be attempted. Test equipment may be connected to the ECU circuit boards from the front of the transmitter using the supplied extender circuit board with power energized.
Therefore, the transmitter indicators and meters must be used to isolate a problem to a specific area.

ELECTRICAL ADJUSTMENTS.

MODULATION CALIBRATION CONTROLS. Modulation calibration controls R201 through R205 calibrate the modulation sample for each power level. A complete description of the procedure to adjust the power level controls is presented in SECTION II, INSTALLATION. Refer to POWER LEVEL AND MODULATION CALIBRATION ADJUSTMENT in SECTION II for the adjustment procedure.

DIRECTIONAL COUPLER NULL CONTROLS. Directional coupler null controls R223, R224, R234, and R235 null the directional coupler sampling circuit. Due to the critical nature of the directional coupler null controls, the controls are not considered field adjustable. If the controls are required to be adjusted, contact the Broadcast Electronics Customer Service Department for information and instructions to adjust the directional coupler null controls.

TROUBLESHOOTING PROCEDURES.

The output network assembly troubleshooting procedures are presented in Tables 5-5 through 5-7. Table 5-5 presents the directional coupler circuit board troubleshooting. Table 5-6 presents the lightning detection circuit board and spark gap troubleshooting. Table 5-7 presents the lightning protection circuit board troubleshooting. Refer to Tables 5-5 through 5-7 to isolate the problem to a specific circuit. Once the trouble is isolated, refer to the circuit board theory of operation presented in SECTION IV and the schematic diagrams to assist in problem resolution.

Component locations for the directional coupler, lightning detection, and lightning protection circuit boards are presented in Figure 5-1. Refer to Figure 5-1 to locate the components.

©2011 Broadcast Electronics

TABLE 5-5. DIRECTIONAL COUPLER CIRCUIT BOARD TROUBLESHOOTING

SYMPTOM	CIRCUITRY TO CHECK
HIGH REFLECTED POWER METER INDICATION WHEN ACTUAL REFLECTED POWER IS LOW	1. Check diode D201 through D210.

TABLE 5-6. LIGHTNING DETECTION CIRCUIT BOARDISPARK GAP TROUBLESHOOTING

SYMPTOM	CIRCUITRY TO CHECK
HIGH REFLECTED POWER CONDITION	1. Check the lightning detection circuit board for a short circuit condition.
NO LIGHTNING DETECTION OPERATION	1. Check the spark gap. 2. Check optically operated transistor Q401 on the lightning detection circuit board.

TABLE 5-7. LIGHTNING PROTECTION CIRCUIT BOARD TROUBLESHOOTING

SYMPTOM	CIRCUITRY TO CHECK
HIGH REFLECTED POWER OR SHORTED OUTPUT CONDITION	1. Check the circuit board for a short circuit condition.

5.10 ECU.

WARNING THE TRANSMITTER CONTAINS MULTIPLE CIRCUIT GROUNDS WITH HIGH AC AND DC POTENTIALS WITH RESPECT TO THE CHASSIS WHICH IS AT EARTH POTENTIAL.

WARNING

WARNING DO NOT ENERGIZE THE TRANSMITTER WITH TEST EQUIPMENT CONNECTED TO THE TRANSMITTER BANDPASS FILTER, RF POWER MODULE, COMBINER, OR POWER SUPPLY COMPONENTS.

WARNING

SAFETY CONSIDERATIONS.

The AM-1A/AM-500A transmitters are equipped with extensive indicator and meter circuitry to allow the operator to isolate problems to a specific area within the transmitter. Due to the hazardous voltages and currents contained in the equipment, operation of the transmitter with test equipment connected to the transmitter RF power module, bandpass filter, combiner, or power supply components is extremely dangerous and must not be attempted. Test equipment may be connected to the ECU circuit boards from the front of the transmitter using the supplied extender circuit board with power energized.
Therefore, the transmitter indicators and meters must be used to isolate a problem to a

©2011 Broadcast Electronics

specific area.

ECU CIRCUIT BOARD INSTALLATION/REMOVAL.

The transmitter ECU is equipped with three circuit boards: 1) exciter, 2) stereo, and 3) controller. Each circuit board is equipped with finger holes for the ease of removal and installation. To remove a circuit board, grasp the board using the finger holes and firmly pull the circuit board out of the ECU.

CAUTION THE TRANSMITTER MAY BE DAMAGED IF THE ECU CIRCUIT BOARDS ARE NOT SECURELY SEATED INTO THE CONNECTORS.

CAUTION

To install the circuit boards: 1) the boards must be inserted into the proper location in the ECU and 2) the boards must be firmly seated into the ECU motherboard. To install a circuit board, proceed as follows:

1. Refer to Figure 5-2 to determine the circuit board location.
2. Insert the circuit board in the appropriate location.
3. Firmly press the circuit board into the connector to engage the connector housing.
4. Firmly press the circuit board into the connector again to engage the connector pins.
5. Repeat the procedure for each ECU circuit board.

ELECTRICAL ADJUSTMENTS.

The following text provides electrical adjustment procedures for the transmitter ECU. The procedures are presented in the following order.

1. ECU Extender Circuit Board Operation.
2. Controller Circuit Board Adjustments.
3. ECU Meter Switch Circuit Board Adjustments.
4. Stereo Circuit Board Adjustments.
5. Exciter Circuit Board Adjustments.
6. Display Circuit Board Adjustments.

ECU EXTENDER CIRCUIT BOARD OPERATION.

The transmitter ECU chassis is equipped with an extender circuit board. The circuit board is designed to allow access to the ECU circuit board components for maintenance procedures. To use the circuit board for maintenance procedures, proceed as follows:

1. Refer to Figure 5-2 and locate the extender circuit board assembly in the ECU.
2. Remove the extender circuit board from the ECU.
3. Loosen the extender circuit board locking nut.
4. Completely extend the circuit board.
5. Tighten the extender circuit board locking nut.
6. Remove the circuit board required for maintenance and place the extender circuit

©2011 Broadcast Electronics

board in the location in the ECU.

7. Place the desired circuit board onto the extender circuit board.
8. Firmly press the circuit board into the extender circuit board connectors.

5.11 CONTROLLER CIRCUIT BOARD ADJUSTMENTS.

P1 SET - P5 SET CONTROLS. The P1 SET through P5 SET controls adjust the ECU POWER CONTROL 1 through 5 controls to desired levels. A complete description of the procedure to adjust the power level controls is presented in SECTION II, INSTALLATION. Refer to POWER LEVEL AND MODULATION CALIBRATION ADJUSTMENT in SECTION II for the adjustment procedure.

FWD AND RFL CALIBRATIONS. FWD CAL control R56 and RFL CAL control R143 calibrate the transmitter forward and reflected power samples. Due to the critical nature of the FWD CAL and RFL CAL controls, the controls are not considered field adjustable. If the controls are required to be adjusted, contact the Broadcast Electronics Customer Service Department for information and instructions to adjust the FWD and RFL CAL controls.

ECU METER SWITCH CIRCUIT BOARD ADJUSTMENTS.

FORWARD POWER METER LOW AND HIGH SCALE CALIBRATIONS. Low scale control R501 and high scale control R504 calibrate the forward power meter. Due to the critical nature of the low scale and high scale meter calibrate controls, the controls are not considered field adjustable. If the controls are required to be adjusted, contact the Broadcast Electronics RF Customer Service Department for information and instructions to adjust the low and high scale forward power meter controls.

REFLECTED POWER METER LOW AND HIGH SCALE CALIBRATIONS. Low scale control R505, high scale control R506, and ac sample control R511 calibrate the reflected power meter. Due to the critical nature of the low scale, high scale, and ac sample meter calibrate controls, the controls are not considered field adjustable. If the controls are required to be adjusted, contact the Broadcast Electronics RF Customer Service Department for information and instructions to adjust the low scale, high scale, and ac sample reflected power meter controls.

FWD AND RFL CALIBRATIONS. FWD CAL control R56 and RFL CAL control R143 calibrate the transmitter forward and reflected power samples. Due to the critical nature of the FWD CAL and RFL CAL controls, the controls are not considered field adjustable. If the controls are required to be adjusted, contact the Broadcast Electronics RF Customer Service Department for information and instructions to adjust the FWD and RFL CAL controls.

5.12 STEREO CIRCUIT BOARD ADJUSTMENTS.

STEREO ADJUSTMENT. The stereo adjustment consists of configuring the equalization circuitry on the stereo circuit board to obtain the optimum stereo performance. The equalization circuitry consists of the equalization circuit 1 and equalization circuit 2 controls. A complete description of the procedure to adjust the equalization controls is presented in SECTION II, INSTALLATION. Refer to STEREO ADJUSTMENT in SECTION II for the adjustment procedure.

EXCITER CIRCUIT BOARD ADJUSTMENTS.

MODULATION CALIBRATION. Modulation calibration control R62 calibrates the exciter modulation circuit. Due to the critical nature of the modulation calibration control, the

©2011 Broadcast Electronics

control is not considered field adjustable. If the control is to be adjusted, contact the Broadcast Electronics RF Customer Service Department for information and instructions to adjust the modulation calibration control.

PHASE MODULATOR CALIBRATION. Phase modulator calibration control R159 calibrates the exciter phase modulator circuit. Due to the critical nature of the phase modulator calibration control, the control is not considered field adjustable. If the control is to be adjusted, contact the Broadcast Electronics RF Customer Service Department for information and instructions to adjust the phase modulator calibration control.

SYMMETRY CONTROL. Symmetry calibration control R170 adjusts the exciter RF output square-wave signal. Due to the critical nature of the symmetry control, the control is not considered field adjustable. If the control is to be adjusted, contact the Broadcast Electronics RF Customer Service Department for information and instructions to adjust the symmetry control.

IPM CORRECTION CIRCUIT CONTROLS. IPM GAIN control R189, IPM TRACK control R104, IPM SHAPE CONTROL R198, and IPM ZERO SET control R191 calibrate the IPM correction circuit. Due to the critical nature of the IPM correction circuit controls, the controls are not considered field adjustable. If the controls are to be adjusted, contact the Broadcast Electronics RF Customer Service Department for information and instructions to adjust the IPM correction circuit controls.

SINGLE CHAN MONO LEVEL CONTROL. SINGLE CHAN MONO LEVEL control R41 is designed to boost a remaining audio channel level in the event of a failure in one channel. A complete description of the procedure to adjust the SINGLE CHAN MONO LEVEL control is presented in SECTION II, INSTALLATION. Refer to SINGLE CHANNEL LEVEL in SECTION II for the adjustment procedure.

AVERAGE MODULATION LIMIT CONTROL. Average modulation limit control R217 limits the average tone modulation. The control is adjusted to limit at 110% tone modulation. Due to the critical nature of the modulation calibration control, the control is not considered field adjustable. If the control is to be adjusted, contact the Broadcast Electronics Customer Service Department for information and instructions to adjust the average modulation limit control.

NEG LIMIT CONTROL. NEG LIMIT control R76 limits the negative L+R information to prevent excessive modulation when the L+R signal is summed with the pilot tone. The NEG LIMIT control is adjusted in the following procedure.

Procedure. To adjust NEG LIMIT control R76, proceed as follows:

WARNING DISCONNECT ALL TRANSMITTER PRIMARY POWER BEFORE PROCEEDING.

WARNING

Disconnect all transmitter primary power.

Connect the audio generator to the TB2 LEFT INPUT and RIGHT INPUT audio terminals on the ECU rear-panel.

Refer to Figure 5-3 and adjust NEG LIMIT control R76 fully counterclockwise.

Adjust the audio generator for a L=R 1 kHz output at +10 dBm.

Adjust the AM stereo modulation monitor to indicate positive L+R modulation.

©2011 Broadcast Electronics

Energize the transmitter primary power and operate the transmitter.

Observe the modulation monitor and ensure the monitor indicates 100% positive L+R modulation. If the monitor does not indicate 100% L+R modulation, adjust the audio generator level slightly for a +100% L+R modulation indication on the monitor.

Adjust the AM stereo modulation monitor to indicate negative L+R modulation.

Refer to Figure 5-3 and adjust NEG LIMIT control R76 until the AM stereo Modulation monitor indicates -95% L+R modulation.

WARNING DISCONNECT ALL TRANSMITTER PRIMARY POWER BEFORE PROCEEDING.

WARNING

Disconnect all transmitter primary power.

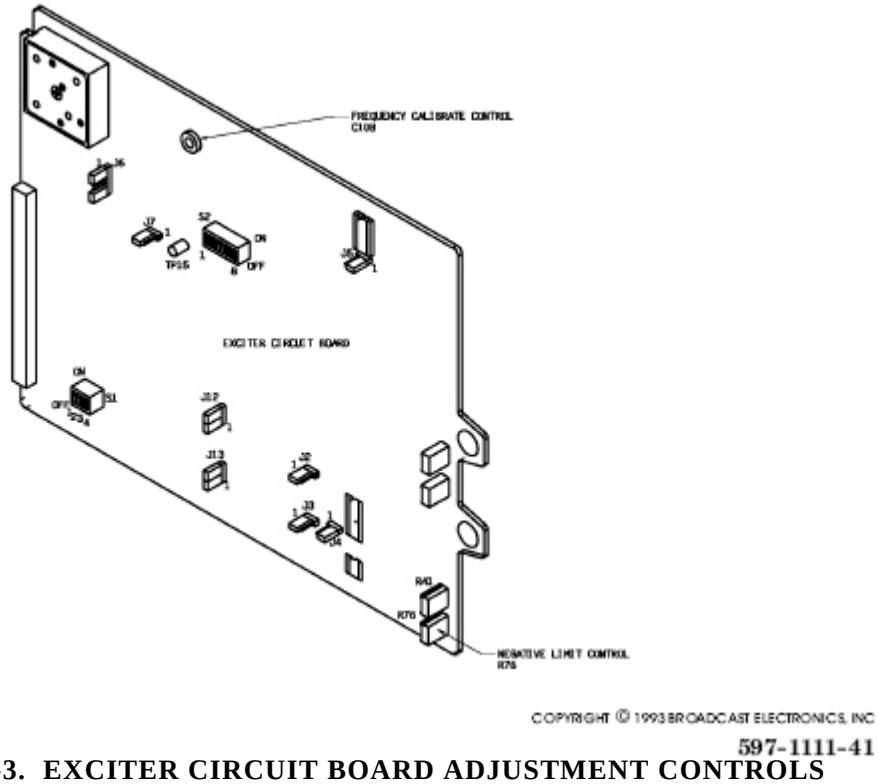

FIGURE 5-3. EXCITER CIRCUIT BOARD ADJUSTMENT CONTROLS

Remove all test equipment.

FREQUENCY CALIBRATION CONTROL. Frequency calibration control C108 calibrates the exciter frequency synthesizer. The frequency calibration control is adjusted in the following procedure.

Procedure. To adjust frequency calibration control C108, proceed as follows:

WARNING DISCONNECT ALL TRANSMITTER PRIMARY POWER BEFORE PROCEEDING.

WARNING

©2011 Broadcast Electronics

Disconnect all transmitter primary power.

Remove the exciter circuit board and install the ECU extender circuit board in the exciter circuit board location.

Install the exciter circuit board on the extender circuit board.

Refer to Figure 5-3 and connect a frequency counter to test point TP15.

Energize the transmitter primary power and operate the transmitter.

Refer to Figure 5-3 and adjust frequency calibration control C108 for the carrier frequency.

WARNING DISCONNECT ALL TRANSMITTER PRIMARY POWER BEFORE PROCEEDING.

WARNING

Disconnect all transmitter primary power.

Remove all test equipment and replace the exciter circuit board.

5.13 DISPLAY CIRCUIT BOARD ADJUSTMENTS.

L/L+R AND R/L-R DISPLAY CALIBRATION CONTROL. L/L+R calibration control R41 and R/L-R calibration control R47 calibrate the L/L+R and R/L-R displays. The L/L+R and R/L-R calibration controls are adjusted in the following procedure.

Procedure. To adjust L/L+R calibration control R41 and R/L-R calibration control R47, proceed as follows:

WARNING DISCONNECT ALL TRANSMITTER PRIMARY POWER BEFORE PROCEEDING.

WARNING

Disconnect all transmitter primary power.

Connect the audio generator to the TB2 LEFT INPUT and RIGHT INPUT audio terminals on the ECU rear-panel.

Operate the transmitter at a normal output power.

Adjust the audio generator for an in-phase L=R 1 kHz output at a level to generate 100% L+R modulation as indicated by the modulation monitor.

Operate the EXCITER MONITOR for L+R/L-R indications.

Adjust L/L+R calibration control R41 on the display circuit board until the EXCITER MONITOR just indicates 100% L+R modulation.

Adjust the audio generator for an out-of-phase L=R 1 kHz output at a level to generate 100% L-R modulation as indicated by the modulation monitor.

Adjust R/L-R calibration control R47 on the display circuit board until the EXCITER MONITOR just indicates 100% L-R modulation.

©2011 Broadcast Electronics

WARNING DISCONNECT ALL TRANSMITTER PRIMARY POWER BEFORE PROCEEDING.

WARNING

Disconnect all transmitter primary power.

Remove all test equipment.

TROUBLESHOOTING PROCEDURES.

The ECU assembly troubleshooting procedures are presented in Tables 5-8 through 5-11. Table 5-8 presents the exciter circuit board troubleshooting. Table 5-9 presents the stereo circuit board troubleshooting. Table 5-10 presents the controller circuit board troubleshooting. Table 5-11 presents the ECU power supply troubleshooting. Refer to Tables 5-8 through 5-11 to isolate the problem to a specific circuit. Once the trouble is isolated, refer to the circuit board theory of operation in SECTION IV and the schematic diagrams to assist in problem resolution.

TABLE 5-8. EXCITER CIRCUIT BOARD TROUBLESHOOTING (sheet 1 of 2).

SYMPTOM	CIRCUITRY TO CHECK
1. LOCK INDICATOR EXTINGUISED	1. Refer to the factory test data sheets and ensure the exciter circuit board frequency synthesizer (S1, S2, and J6) is programmed for the correct operating frequency. 2. Check U 25 pin 1 for a 0V to 5V square-wave signal at FcX4 (carrier frequency times four) or FcX8 (carrier frequency times eight. A. If the square-wave signal at U25 is not present, check for a greater than 13 volt DC signal at the anode of D23. 1. If the DC voltage is present, defective VCO, Q4, or U30A. 2. If the DC voltage is not present, defective Q3 or C106. B. If the square wave signal at U25 is below FcX4 or FcX8, measure the DC voltage at J8 of the VCO assembly. 1. If the DC voltage at TP7 is greater than 13 volts, defective VCO. 2. If the DC voltage at TP7 is less than 2 volts, defective U25, U26A, U26B, Y1, or U24. C. If the square wave signal at U25 is above FcX4 or FcX8, measure the DC voltage at TP7 of the VCO assembly. 1. If the DC voltage at TP7 is greater than 13 volts, defective U25, U26B, U26A, Y1, or U24. 2. If the DC voltage at J8 is less than 2 volts, defective VCO.
1. NO L+R MODULATION OF CARRIER DURING MONOPHONIC OPERATION	1. Remove the stereo circuit board if present and place J4 in the left or right channel position as determined by the channel with applied audio. 2. Insert a +10 dBm 1 kHz signal in the appropriate audio channel and check for audio at U39 pins 3 and 6. A. If the audio is not present, defective: 1) left channel – U39, U2A, U2B, U1A, or U1B 2) right channel – U39, U4A, U4B, U5A, or U5B. B. If the audio is present, defective U8A, U8B, U9A, U9B, U14B, U13.

©2011 Broadcast Electronics

1. NO L+R MODULATION DURING STEREO OPERATION	1. Defective U39, U8A, U8B, U9A, U9B, U14B, or U13.
1. PWM DRIVE INDICATOR EXTINGUISED ON A POWER MODULE	1. Defective U21A through U21F, U19, U20, U45, D6 through D21, or D47 through D50.
1. RF DRIVE INDICATOR EXTINGUISED ON THE POWER MODULE	1. Check for a square-wave carrier frequency signal at U46 Pin 1 and 7. A. If the carrier frequency signal is present, defective Q13 thru Q22, D38 through D45, or D51, D52. B. If the carrier frequency signal is not present, check for a 0V-5V p-p square-wave carrier frequency signal present at U40 pins 1 and 16. 1. If the carrier frequency signal is present, defective U46. 2. If the carrier frequency signal is not present, defective U40.
1. RED EXCITER INDICATOR ILLUMINATED ON TRANSMITTER MONITOR	1. Check the frequency synthesizer programming at S1, S2, and J6. 2. Check for a square-wave carrier frequency signal at U23 pin 12. A. If the carrier frequency signal is present, check for a 4V p-p 125 kHz to 133 kHz PWM triangle-wave at TP-5. 1. If the PWM signal is present, defective U22A or U23A. 2. If the PWM signal is not present, defective U10, U11, U12, U44. B. If the carrier frequency signal at U23 pin 12 is not present, check for a 2XFC (two times carrier frequency) at TP-9. 1. If the carrier frequency signal is present, defective U33C or U33D, U39A, U39B, U39C, U40 or Q8. 2. If the carrier frequency signal is not present, check for a carrier frequency signal at TP-15. a. If the signal is present, defective Q5, Q6, Q7, U37, U38A, U38B, U38C, or U38D. b. If the signal is not present, check for a 0V-5V p-p carrier frequency signal at U29 pin 12. 1. If the carrier frequency signal is present, defective U31B, U42B, U32A, U32B, U32C, U32D, U30C or P7. 2. If the carrier frequency signal is not present, defective U33A, U30B, or U29.
1. LOW DEMODULATOR LEFT CHANNEL MODULATION LEVEL WITH LOW EXCITER MONITOR LEFT CHANNEL MODULATION LEVEL	1. Defective U2A, U2B, U1A, U1B, U3A, U3B or P2 programming.
1. LOW DEMODULATOR RIGHT CHANNEL MODULATION LEVEL WITH LOW EXCITER MONITOR RIGHT CHANNEL MODULATION LEVEL	1. Defective U5A, U5B, U4A, U4B, U6A, U6B or P3 programming.

©2011 Broadcast Electronics

TABLE 5-9. STEREO CIRCUIT BOARD TROUBLESHOOTING.

SYMPTOM	CIRCUITRY TO CHECK
1. RED EXCITER INDICATOR ILLUMINATED ON TRANSMITTER MONITOR	1. Insert a 1 kHz audio signal at +10 dBm into the left channel and operate the stereo circuit board to stereo. Check for a 3V p-p quadrature AM signal at TP-7. A. If the signal is present, defective U40A, U40B, T1, U39A, U39B, or U39C. B. If the signal is not present, check for a quadrature AM signal at U38 pin 3. 1. If the signal is present, defective U38A, U38B, U38C, U38D, U38E, Q1 or Q2. 2. If the signal is not present, check for a quadrature AM signal at U37 pin 1. a. If the signal is present, defective U37, L4, L5, L6, L7, D3, D4, or the S2, S3, or S4 programming. b. If the signal is not present, defective U36, U35A, U35B, U34A, U34B, U33, U32, or U26.
1. NO L-R MODULATION PRESENT AT THE EXCITER MONITOR METER	2. Defective U25B, U27B, or U31B.
1. LOW DEMODULATOR LEFT CHANNEL MODULATION LEVEL WITH NORMAL EXCITER MONITOR LEFT CHANNEL MODULATION LEVEL	1. Insert a +10 dBm 1 kHz signal into the left channel. Check for a 2V p-p 1 kHz signal at U4 pin 1. A. If the signal is present, defective U4B, U5A, U5B, or J1. B. If the signal is not present, defective U1A, U2, U1B, U3, or U4A.
1. LOW DEMODULATOR RIGHT CHANNEL MODULATION LEVEL WITH NORMAL EXCITER MONITOR RIGHT CHANNEL MODULATION LEVEL	1. Insert a +10 dBm 1 kHz signal into the right channel. Check for a 2V p-p 1 kHz signal at U10 pin 1. A. If the signal is present, defective U10B, U11A, U11B, or J2. B. If the signal is not present, defective U7A, U8, U7B, U9, or U10A.

TABLE 5-10. CONTROLLER CIRCUIT BOARD TROUBLESHOOTING (Sheet 1 of 2).

SYMPTOM	CIRCUITRY TO CHECK
1. NO POWER CONTROL PWM SIGNAL	1. Check for a 1 kHz 15V p-p square-wave signal at TP-7. A. If the square-wave signal is present, defective Q22. B. If the square-wave signal is not present, check for a 1 kHz 50% duty-cycle square-wave signal at TP8. 3. If the square-wave signal is not present, defective U44B, U40C, or U46E. C. If the square-wave signal is not present, check for a DC voltage proportional to power at TP11. 1. If the DC voltage is present, defective U44A, U40V, U41A, U42, U43. 2. If the DC voltage is not present, contact the Broadcast Electronics Customer Service Department. 2. Check for a HIGH at U36C pin 8. a. If the HIGH is present, defective U36C. b. If the HIGH is not present, contact the Broadcast Electronics Customer Service Department.
1. NO TRANSMITTER ON	1. Check for a HIGH at U23A pin 3.

©2011 Broadcast Electronics

SIGNAL OUTPUT	A. If the HIGH is present, defective Q13. B. If the HIGH is not present, check for a LOW at U23A pin 2. 1. If the LOW is present, defective U23A. 2. If a HIGH is present, contact the Broadcast Electronics Customer Service Department.
1. CONFLICT INDICATOR ILLUMINATED	1. Check U7, U8, U9, S1, S2, S3, U12A, U12B, U21A, U21B, U21C, U20A, U20B, U20C, U20D, U19, and U13.

TABLE 5-11. ECU POWER SUPPLY TROUBLESHOOTING.

SYMPTOM	CIRCUITRY TO CHECK
1. NO OUTPUT POWER NO NORMAL/FAULT ECU INDICATIONS	1. Check the ECU power supply fuse. 2. Check the ECU power supply assembly.

COMPONENT REPLACEMENT PROCEDURE. Component replacement on printed circuit boards requires extreme care to avoid damage to the circuit board traces. The following text describes the procedure to replace components on the circuit boards.

On all circuit boards, the adhesive securing the copper trace to the board melts at almost the same temperature at which solder melts. A circuit board trace can be destroyed by excessive heat or lateral movement during soldering. Use of a small iron with steady pressure is required for circuit board repairs.

To remove a component from a circuit board, cut the leads from the body of the defective component while the device is still soldered to the board.

Grip each component lead, one at a time, with long-nose pliers. Rotate the circuit board and touch a soldering iron to the lead at the solder connection. When the solder begins to melt, push the lead through the back side of the board. Each lead may now be heated independently and pulled out of each hole. The holes may be cleared of solder by carefully re-heating each hole with a low wattage iron and removing the residual solder with a soldering vacuum tool.

WARNING WARNING WARNING WARNING

MOST SOLVENTS WHICH WILL REMOVE ROSIN FLUX ARE VOLATILE AND TOXIC BY THEIR NATURE AND SHOULD BE USED ONLY IN SMALL AMOUNTS IN A WELL VENTILATED AREA, AWAY FROM FLAME SUCH AS FROM A SOLDERING IRON OR SMOKING MATERIALS. OBSERVE THE MANUFACTURER'S CAUTIONARY INSTRUCTIONS.

Install the new component and apply solder from the bottom side of the circuit board. After soldering, remove flux with a cotton swab moistened with a suitable solvent. Rubbing alcohol is highly diluted and is not effective.

The board should be checked to ensure the flux has been removed and not just smeared. Rosin flux is not normally corrosive, but rosin will absorb enough moisture in time to become conductive and cause problems.

INTEGRATED CIRCUITS. Special care should be exercised with integrated circuits. Each

©2011 Broadcast Electronics

integrated circuit must be installed by matching the integrated circuit notch with the notch on the socket. Do not attempt to remove an integrated circuit from a socket with your fingers. Use an integrated circuit puller to lightly pry the component from the socket.

5.14 AM MATCHING NETWORK.

The AM matching network provides antenna matching for AM transmitters not equipped with an output tuning system (refer to Figure 5-4). The matching network consists of 2 adjustable inductors and a capacitor. The inductors are used to tune the antenna impedance to the transmitter.

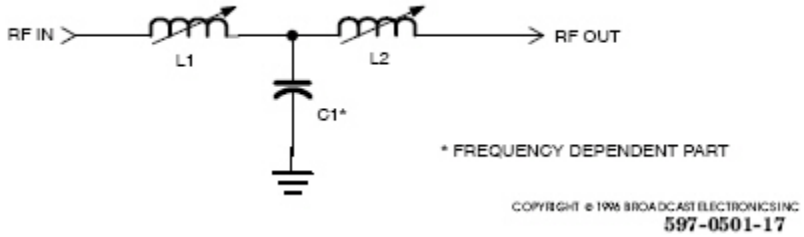

FIGURE 5-4. SCHEMATIC DIAGRAM, AM MATCHING NETWORK

INSTALLATION.

The matching network is housed in a chassis designed for installation in a 19 inch rack. The chassis requires 8.75 inches of rack space. Mount the unit in the rack as follows:

1. Mount the unit in the rack directly below the transmitter.

2. Connect the Type N elbow to the transmitter RF OUT receptacle.

3. Connect the Type-N cable located in the accessory kit between the transmitter RF OUT receptacle and the RF IN connector on the matching network.

4. Connect the Type-N connector antenna cable to the RF OUT on the matching network.

OPERATION.

The matching network is equipped with TUNE and LOAD controls. The controls are adjusted at the factory for a 50 Ohm load. To adjust the TUNE and LOAD controls, operate the transmitter at the normal output power and adjust the controls for a minimum reflected power indication on the transmitter reflected power meter.

©2011 Broadcast Electronics

6 Parts List

This section provides parts lists for the AM-1A/AM-500A transmitters. The parts lists provide descriptions and part numbers of electrical components, assemblies, and selected mechanical parts required for maintenance. Each parts list entry in this section is indexed by reference designators appearing on the applicable schematic diagrams.

This bill of material uses an indented structure to show relationships of parts into sub assemblies. Example; all BOM LEVEL 2 parts are contained in the BOM LEVEL 1 part immediately above it.

6.1 AM 500A, AM-1A

BOM LEVEL	PART NO.	DESCRIPTION	QTY	REF. DES.
0	907-0500-001	AM-500A XMTR 220V 1PH		
..1	310-0072	METER,RFL PWR 3.5 WDO MT,TAUTBAND"	1	
..1	310-0073	METER,FWD PWR 3.5 WDO MT,TAUTBAND"	1	
0	907-1000-001	AM-1A XMTR 220V 1PH		
..1	310-0062	METER,RFL PWR,3.5	1	
..1	310-0063	METER,FWD PWR,3.5	1	
..1	591-0001	PLATE,FCC ID	1	
..1	957-0009-011	ASSY,EXCITER/CONTROLLER,AM,A SERIES	1	
....2	140-0036	VARISTOR,V275LA20A	1	
....2	339-0008	FILTER,RFI,3A 250VAC 50/60HZ	1	
....2	400-6700	GROMMET STRIP,.062-.090	0.212	
....2	402-0000	TY-RAP	3	
....2	402-0008	MTG DEVICE,FOR #6SCR,TIE CBL	2	
....2	407-0119	MOUNT,PUSH,CBL TIE PM-1	1	
....2	409-0026	CARD GUIDE,6	16	
....2	415-0011	HOLDER,BATTERY,9V,SOLDER LUGS	1	
....2	420-0817	ASSY,FEMALE SCREWLOCK 205817-1	3	
....2	420-2504	SCREW,2-56X.250,S.S. PH FH SC	4	
....2	420-6114	SCREW,6-32X.875,S.S. PH	4	
....2	421-0201	10-32 S.S. HEX NUT	4	
....2	421-1113	RIV,CLOSED-END .125 X .316L	2	
....2	421-6008	6-32 KEP NUT	27	
....2	422-6106	SCREW,SEMS 6-32 X 3/8 PAN PH. ST."	48	
....2	423-0002	#10 LOCK SPLIT	4	
....2	423-6002	#6 LOCK SPLIT	18	
....2	441-0068	STOFF,ALUM 1/4HEX X 1 1/2 6-32	4	
....2	441-8153	SPR,.25 HEX X .31LG,6-32 THD	7	

BOM LEVEL	PART NO.	DESCRIPTION	QTY	REF. DES.
....2	441-8217	STOFF,ALUM 1/4HEX X 5/8 6-32	3	
....2	457-0039	HINGE,ECU,AM XMTR	1	
.....3	457-0039-009	HINGE,ECU,AM XMTR,UNPAINTED	1	
....2	466-0094	ANGLE,METER MOUNTING	4	
....2	467-1001-1	FILTER,WINDOW,GREY	1	
....2	471-0843	CHASSIS,ECU,AM XMTR	1	
....2	471-0844	PANEL,REAR,ECU,AM XMTR	1	
.....3	471-0844-009	PANEL,REAR,ECU,AM XMTR,UNSCRND	1	
....2	471-0845	COVER,TOP,ECU,AM XMTR	1	
....2	471-0846	PANEL,FRONT,ECU,AM XMTR	1	
....2	471-0848	SHIELD,P.S.,ECU,AM XMTR	1	
....2	471-5049	DOOR,ECU,A"VERSION AM"	1	
....2	482-0030	KNOB,RB-67-1-MD,BL MATTE,1/4 (NOTE)	2	
....2	540-0006	PWR SPLY,SMPS,3 OUTPUT,40W	1	
....2	594-0039	LABEL,WARNING PS CAB	1	
....2	701-0028	TAG,YEL,SIZE 5,4 3/4X2 3/8	1	
....2	917-0205	ASSY,PCB ECU CONTROLLER,AM,A/E SERIES (NOTE)	1	
.....3	003-1066	CAP,CER,MNLY,.1uF,50V,10% *NOTE*	80	C1,C2,C3,C4, C5,C6,C8,C9, C10,C11,C12, C13,C14,C15, C16,C17,C18, C19,C20,C21, C22,C23,C24, C25,C26,C27, C28,C29,C31, C32,C37,C39, C40,C41,C42, C43,C44,C45, C46,C47,C57, C59,C61,C62, C65,C68,C69, C70,C71,C74, C90,C91, C102,C104, C105,C36, C30,C33,C7, C50,C48,C53, C126,C66, C88,C96, C107,C111, C112,C127, C113,C114, C117,C118, C128,C122, C123,C124, C125,C100,
.....3	003-4743	CAP,CER MNLY,.47uF,50V,10%	6	C109,C93, C115,C98, C99,C101

©2011 Broadcast Electronics

BOM LEVEL	PART NO.	DESCRIPTION	QTY	REF. DES.
.....3	013-2064	CAP,LYTIC,2.2uF,63V,STDUP	5	C58,C63,C89, C94,C97
.....3	020-1064	CAP,LYTIC,1uF,5OV,NP,STDUP	2	C133,C134
.....3	023-1075	CAP,LYTIC,10UF,50V NP STDUP	15	C34,C35,C49, C51,C52,C54, C55,C56,C64, C95,C110, C116,C130, C121,C119
.....3	024-1064	CAP,LYTIC,1UF,50V,RAD	3	C67,C108, C131
.....3	024-3374	CAP,LYTIC,33UF,35V,STDUP	1	C132
.....3	030-1043	CAP,CER MOLDED,.01uF,200V,RAD	1	C129,
.....3	038-1049	CAP,TUB,.033MFD,80V	1	C38
.....3	041-2722	CAP,MICA,270PF,300V,5%	1	C135
.....3	100-1041	RES,1K OHM,1/4W,1%	18	R15,R18,R19, R20,R23,R39, R59,R98, R108,R135, R139,R140, R142,R156, R160,R170, R179,R181
.....3	100-1051	RES,10K OHM,1/4W,1%	26	R8,R32,R65, R66,R72,R85, R91,R93,R95, R109,R134, R137,R152, R154,R155, R158,R164, R165,R168, R174,R175, R176,R190, R192,R193, R194
.....3	100-1531	RES,150 OHM,1/4W,1%	1	R74
.....3	100-2273	RES,2.2MEG OHM,1/4W,5%	1	R200
.....3	100-3373	RES,3.3MEG OHM,1/4W,5%	15	R110,R111, R112,R113, R114,R115, R116,R117, R118,R119, R120,R121, R122,R167, R125
.....3	100-4773	RES,4.7MEG OHM,1/4W,5%	4	R83,R73,R78, R191,
.....3	103-1007	RES,1 MEG OHM,1/4W,1%,METAL	7	R47,R87,R90, R97,R100, R105,R177,
.....3	103-1021	RES,10 OHM,1/4W,1%,METAL	6	R46,R48,R53, R54,R94, R197

©2011 Broadcast Electronics

BOM LEVEL	PART NO.	DESCRIPTION	QTY	REF. DES.
.....3	103-1062	RES,100K OHM,1/4W,1%,METAL	35	R1,R166,R58, R141,R27, R26,R30,R13, R24,R28, R172,R173, R138,R159, R96,R169, R188,R123, R79,R80, R131,R132, R133,R62, R162,R198, R187,R201, R202,R203, R204,R205, R208,R207, R178
.....3	103-1261	RES,121K OHM,1/4W,1%,METAL	2	R51,R196
.....3	103-1561	RES,150K OHM,1/4W,1%,METAL	1	R88
.....3	103-1695	RES,16.9K OHM,1/4W,1%,METAL	1	R104
.....3	103-1823	RES,182 OHM,1/4W,1%,METAL	1	R43
.....3	103-2051	RES,20K OHM,1/4W,1%,METAL	4	R16,R29,R81, R82,R189
.....3	103-2241	RES,2.21K OHM,1/4W,1%,METAL	8	R9,R11,R103, R12,R33,R34, R35,R21,
.....3	103-2341	RES,2.32K OHM,1/4W,1%,METAL	1	R17,
.....3	103-2431	RES,243 OHM,1/4W,1%,METAL	8	R37,R38,R41, R101,R126, R127,R128, R129,R130,
.....3	103-2551	RES,25.5K OHM,1/4W,1%,METAL	1	R92
.....3	103-2615	RES,26.1K OHM,1/4W,1%,METAL	2	R171,R195
.....3	103-3014	RES,3.01K OHM,1/4W,1%,METAL	3	R99,R86, R106
.....3	103-3061	RES,301K OHM,1/4W,1%,METAL	5	R25,R31, R161,R7,R52,
.....3	103-3923	RES,392 OHM,1/4W,1%,METAL	8	R36,R55,R44, R63,R64,R42, R183,R184
.....3	103-3924	RES,3.92K OHM,1/4W,1%,METAL	1	R76
.....3	103-4325	RES,43.2K OHM,1/4W,1%,METAL	1	R14
.....3	103-4441	RES,4.42K OHM,1/4W,1%,METAL	1	R10
.....3	103-4731	RES,475K OHM,1/4W,1%,METAL	1	R206
.....3	103-4741	RES,4.75K OHM,1/4W,1%,METAL	4	R45,R40, R102,R199
.....3	103-4755	RES,47.5K OHM,1/4W,1%,METAL	8	R50,R68,R69, R70,R84, R148,R149, R150
.....3	103-4993	RES,499 OHM,1/4W,1%,METAL	3	R163,R153, R210
.....3	103-6195	RES,61.9K OHM,1/4W,1%,METAL	1	R75
.....3	103-6814	RES,6.81K OHM,1/4W,1%,METAL	1	R124

©2011 Broadcast Electronics

BOM LEVEL	PART NO.	DESCRIPTION	QTY	REF. DES.
.....3	103-7503	RES,750 OHM,1/4W,1%,METAL	2	R57,R144
.....3	103-9095	RES,90.9K OHM,1/4W,1%,METAL	12	R49,R136, R71,R151, R157,R60, R61,R67, R145,R146, R147,R89
.....3	178-5001	RES,TRMR,500 OHM,15 TURN	2	R56,R143
.....3	179-1053	RES,TRMR,10K,10 TURN	5	R2,R3,R4,R5, R6
.....3	201-2800	DIODE,HOT CARRIER	8	D31,D42,D33, D30,D36,D39, D40,D37
.....3	203-4005	DIODE,1N4005	21	D11,D3,D9,D7 D5,D14,D15, D17,D13,D16, D1,D20,D18, D22,D24,D23, D25,D29,D26, D27,D28
.....3	203-4148	DIODE,1N4148	33	D2,D4,D6,D8, D10,D12,D19, D21,D32,D34, D35,D38,D41, D44,D45,D49, D50,D51,D53, D54,D55,D56, D47,D48,D57, D58,D59,D60, D61,D62,D63, D64,D46
.....3	210-0106	TSTR,VP0106N3,DMOSFET	9	Q38,Q39,Q44, Q45,Q40,Q41, Q42,Q43,Q52
.....3	210-3906	2N3906 PNP 40V 2A .35W 250MHZ	2	Q53,Q54
.....3	210-7000	TSTR,2N7000,MOSFET	47	Q12,Q7,Q8, Q16,Q4,Q15, Q14,Q2,Q1, Q17,Q19,Q18, Q6,Q3,Q11, Q5,Q13,Q9, Q10,Q22,Q23, Q24,Q20,Q21, Q36,Q35,Q37, Q25,Q27,Q34, Q28,Q29,Q33, Q31,Q32,Q30, Q26,Q51,Q47, Q48,Q46,Q50, Q49,Q57,Q58, Q59,Q56
.....3	211-3904	TSTR,2N3904	1	Q55
.....3	220-0317	VR,LM317LZ TO92	1	U70
.....3	220-0801	IC,DAC-08 D/A CONVERTER,8-BIT	2	U42,U43
.....3	220-4025	IC,MC14025B TRIPLE 3-INPUT NOR	1	U24

©2011 Broadcast Electronics

BOM LEVEL	PART NO.	DESCRIPTION	QTY	REF. DES.
.....3	220-4043	IC,MC14043BP RS LATCH	3	U48,U49,U67
.....3	220-4051	IC,4051 CMOS 8-BIT ANLG MPX	1	U39
.....3	220-4053	IC,MC14053B ANLG MPX	1	U41
.....3	221-0074	AMP,OP,BIFET TLO74CW	3	U40,U63,U64,
.....3	221-0339	IC,LM339A,VOLT COMPARATOR	4	U44,U61,U65, U66
.....3	225-0005	IC,CD4071BE,RCA	4	U13,U45,U50, U62
.....3	225-0006	IC,CD4075BE,RCA	5	U37,U12,U21, U19,U69
.....3	225-0007	IC,CD4078BE,RCA	1	U55
.....3	225-0008	IC,CD4081BE	5	U20,U36,U51, U47,U71
.....3	226-1051	RES NET,10K,8-PIN SIP	4	RN1,RN2, RN5,RN8
.....3	226-1060	RES NET,100K,10-PIN SIP	4	RN3,RN4, RN6,RN7
.....3	228-4001	IC, QUAD 2-INPUT NOR	2	U23,U52
.....3	228-4011	IC,MC14011B CD4011 BE	2	U16,U60
.....3	228-4020	IC,14 STAGE COUNTER 4020	2	U26,U58
.....3	228-4028	IC,MC14028B	1	U18
.....3	228-4069	IC,CD4069CN	3	U25,U46,U54
.....3	228-4073	IC,MC14073B	2	U22,U38
.....3	228-4076	IC,MC14076 QUAD REGISTER	2	U15,U17
.....3	228-4512	IC,MC14512B	1	U27
.....3	228-4516	IC,MC14516B	4	U30,U31,U34, U35
.....3	228-4532	IC,MC14532B 8-BIT PRIOR ENCOD	2	U14,U28
.....3	228-4538	IC,MC14538B NATL SEMICONDUCTOR	3	U57,U59,U68
.....3	229-0033	IC,OPTOIS,4N33	15	U7,U6,U2,U1, U5,U4,U3,U8, U9,U10,U11, U33,U32,U53, U56
.....3	229-0336	IC,VOLT REF DIODE LM336Z-2.5	1	U29
.....3	320-0030	MOUNT,LED,R ANGLE,BIVAR	3	XDS1,XDS2, XDS3
.....3	323-9224	IND,LED,GRN,521-9270	2	DS1,DS2
.....3	323-9225	IND,LED,YEL	1	DS3
.....3	340-0002	SW,4 POS,SPST,8-PIN DIP	3	S1,S2,S3
.....3	340-0004	SW,JUMPER PROGRAMMABLE	16	P1,P2,P3,P4, P8,P9,P10, P11,P12,P13, P14,P15,P16, P17,P18,P19
.....3	340-0060	SW,TGL DPDT	1	S4
.....3	343-6330	SW,PB MON CK8121A 78-25	1	S5
.....3	343-6331	SW CAP,MED RED	1	XS5
.....3	400-2175	GROMMET,FOR 1/2	2	
.....3	413-1597	TERM,TURRET,2 SHLDR,.219,GOLD FLASH	7	E10,TP7,TP8, TP9,TP10, TP11,TP12

©2011 Broadcast Electronics

BOM LEVEL	PART NO.	DESCRIPTION	QTY	REF. DES.
.....3	417-0003	CONN,HEADER 3 PIN	3	J1,J2,J3
.....3	417-0004	JACK,TEST,RIGHT ANGLE PC MT	6	TP1,TP2,TP3, TP4,TP5,TP6
.....3	417-0147	RCPT,50P 2 ROW	1	P301
.....3	417-0188	CONN,80PIN FEM,DBL ROW,PCB MT	1	P302
.....3	417-0600	SKT,IC 6 PIN	15	XU7,XU6,XU2 XU1,XU5, XU4,XU3,XU8 XU9,XU10, XU11,XU33, XU32,XU53,X U56
.....3	417-1404	SOCKET,14-PIN DIP	32	XU13,XU45, XU50,XU60, XU22,XU38, XU24,XU37, XU12,XU21, XU19,XU25, XU46,XU54, XU16,XU62, XU20,XU36, XU51,XU47, XU23,XU52, XU44,XU61, XU65,XU66, XU40,XU63, XU64,XU55, XU69,XU71
.....3	417-1604	SKT,16-PIN,DIP	22	XU15,XU17, XU14,XU28, XU18,XU30, XU31,XU34, XU35,XU39, XU42,XU43, XU26,XU48, XU49,XU67, XU41,XU27, XU57,XU58, XU59,XU68
.....3	417-4004	CONN,HEADER,2 PIN	17	J4,J5,J6,J7,J8 J9,J10,J11, J12,J13,J14, J15,J16,J17, J18,J19,J20,
.....3	517-0205	PCB MACH,ECU CONTROLLR,AM-1	1	
....2	917-0208	ASSY,PCB ECU EXTENDER AM-1	1	
.....3	417-0147	RCPT,50P 2 ROW	1	
.....3	417-0152	HEADER,50PIN R.ANGLE	1	
.....3	417-0188	CONN,80PIN FEM,DBL ROW,PCB MT	1	
.....3	417-8001	HEADER,80-PIN R. ANGLE	1	
.....3	420-8706	SCREW,8-32X.375,BRASS THUMB	1	
.....3	471-0849	SUPPORT,EXT CARD,ECU,AM XMTR	1	

©2011 Broadcast Electronics

BOM LEVEL	PART NO.	DESCRIPTION	QTY	REF. DES.
.....3	517-0208	PCB MACH,ECU EXTENDER AM-1	1	
....2	917-0300	ASSY PCB,ECU EXCITER,AM,A/E SERIES	1	
.....3	000-6814	CAP,DISC,68pF,5%,N1500	1	C110
.....3	001-5613	CAP,MONO CER,56PF,200V,10%	1	C107
.....3	003-1013	CAP,MONO CER,.01uF,100V,5%	3	C42,C46,C50
.....3	003-1066	CAP,CER,MNLY,.1uF,50V,10% *NOTE*	72	C3,C4,C5,C8, C12,C15,C18, C19,C20,C23, C27,C30,C31, C33,C35,C37, C38,C39,C41, C45,C49,C53, C55,C56,C63, C64,C65,C66, C67,C76,C79, C80,C81,C85, C88,C90,C91, C92,C101, C102,C104, C111,C115, C116,C117, C119,C120, C122,C123, C124,C126, C127,C128, C129,C131, C135,C136, C139,C157, C138,C141, C143,C144, C155,C163, C165,C164, C168,C169, C170,C175, C176,C95
.....3	003-1523	CAP,MONO CER,.0015uF,100V,5%	3	C112,C113, C173
.....3	003-4723	CAP,MONO CER,.0047uF,100V,5%	3	C98,C103, C156
.....3	003-4743	CAP,CER MNLY,.47uF,50V,10%	4	C82,C158, C159,C166
.....3	020-1064	CAP,LYTIC,1uF,5OV,NP,STDUP	6	C83,C89, C125,C167, C171,C172
.....3	020-2264	CAP,LYTIC,2.2UF,50V,NP,STDUP	1	C174
.....3	020-3374	CAP,LYTIC,33UF,25V,NP	2	C146,C13
.....3	023-1075	CAP,LYTIC,10UF,50V NP STDUP	4	C1,C2,C16, C17
.....3	023-1076	CAP,LYTIC,10uF,50V,STDUP	10	C32,C54,C61, C62,C69,C70, C93,C118, C121,C140
.....3	023-1084	CAP,LYTIC,100MFD,35V,STDUP,RAD	2	C71,C72

©2011 Broadcast Electronics

BOM LEVEL	PART NO.	DESCRIPTION	QTY	REF. DES.
.....3	024-2274	CAP,LYTIC,22UF,100V,STDUP	5	C34,C36,C94, C105,C106
.....3	030-1051	CAP,POLY METAL,.1OuF,100V,1%	8	C147,C148, C149,C150, C151,C152, C153,C154
.....3	030-4743	CAP,POLYESTER FILM,.047UF,100V,RAD	1	C84
.....3	031-1043	CAP,MYLAR FILM,.01UF,100V,RAD	2	C99,C114
.....3	031-2033	CAP,MYLAR FILM,.0022uF,100V,10%	3	C57,C58,C60
.....3	038-4753	CAP,PYST,.47UF,100V	2	C96,C97
.....3	040-1022	CAP,MICA,100PF,500V,RAD	4	C43,C47,C51, C132
.....3	040-1522	CAP,MICA,150PF,500V,RAD	8	C7,C11,C22, C26,C59, C109,C177, C178
.....3	040-2213	CAP,MICA,22PF,500V	2	C160,C162
.....3	040-4713	CAP,MICA,47PF,500V,5%	3	C44,C48,C52
.....3	040-6813	CAP,MICA,68PF,500V,5%	1	C130
.....3	041-1031	CAP,MICA,1000PF,100V,1%	10	C6,C10,C14, C21,C25,C29, C68,C73,C74, C77
.....3	042-2521	CAP,MICA,250PF,500V,1%	1	C78
.....3	042-3312	CAP,MICA,33PF,500V,5%	5	C40,C133, C134,C137, C145
.....3	042-3922	CAP,MICA,390PF,100V,5%	1	C75
.....3	042-5021	CAP,MICA,500PF,500V,1%	3	C9,C24,C100
.....3	096-0009	CAP,TRMR,2-27PF	1	C108
.....3	100-1031	RES,100 OHM,1/4W,1%,METAL	7	R15,R30,R94, R137,R151, R163,R195
.....3	100-1041	RES,1K OHM,1/4W,1%	13	R72,R80,R81, R129,R145, R148,R155, R162,R164, R166,R180, R202,R229
.....3	100-1051	RES,10K OHM,1/4W,1%	31	R35,R52,R53, R54,R68,R85, R116,R117, R135,R138, R139,R140, R152,R92, R93,R188, R10,R11,R12, R25,R26,R27, R199,R181, R191,R210, R211,R213, R214,R216, R218

©2011 Broadcast Electronics

BOM LEVEL	PART NO.	DESCRIPTION	QTY	REF. DES.
.....3	100-1083	RES,10MEG OHM,1/4W,5%	1	R201
.....3	100-1231	RES,121 OHM,1/4W,1%	4	R70,R119, R156,R196
.....3	100-1551	RES,15K OHM,1/4W,1%	4	R14,R29, R169,R171
.....3	100-2273	RES,2.2MEG OHM,1/4W,5%	4	R64,R66, R136,R142
.....3	100-3951	RES,39.2K OHM,1/4W,1%	2	R38,R39
.....3	100-4561	RES,453K OHM,1/4W,1%	2	R74,R154
.....3	100-5673	RES,5.6MEG OHM,1/4W,5%	1	R91
.....3	103-1007	RES,1 MEG OHM,1/4W,1%,METAL	1	R215
.....3	103-1021	RES,10 OHM,1/4W,1%,METAL	8	R65,R67,R82, R83,R113, R130,R114, R69
.....3	103-1062	RES,100K OHM,1/4W,1%,METAL	18	R1,R3,R16, R18,R34,R36, R37,R58,R59, R60,R61, R112,R118, R134,R168, R212,R122, R123
.....3	103-1136	RES,113K OHM,1/4W,1%,METAL	4	R192,R193, R194,R185
.....3	103-1244	RES,1.24K OHM,1/4W,1%,METAL	3	R32,R33, R160
.....3	103-1331	RES,1.33K OHM,1/4W,1%,METAL	1	R79
.....3	103-1825	RES,18.2K OHM,1/4W,1%,METAL	1	R187
.....3	103-2051	RES,20K OHM,1/4W,1%,METAL	1	R42
.....3	103-2104	RES,2.10K OHM,1/4W,1%,METAL	1	R190
.....3	103-2211	RES,22.1K OHM,1/4W,1%,METAL	1	R78
.....3	103-2212	RES,22.1 OHM,1/4W,1%,METAL	25	R172,R173, R174,R175, R176,R177, R178,R179, R203,R204, R205,R206, R207,R208, R209,R219, R220,R221, R222,R223, R224,R225, R226,R227, R228
.....3	103-2213	RES,221 OHM,1/4W,1%,METAL	6	R31,R40, R132,R146, R143,R158
.....3	103-2216	RES,221K OHM,1/4W,1%,METAL	4	R2,R4,R17, R19
.....3	103-2241	RES,2.21K OHM,1/4W,1%,METAL	4	R75,R165, R167,R200
.....3	103-2490	RES,24.9 OHM,1/4W,1%,METAL	1	R147
.....3	103-2495	RES,24.9K OHM,1/4W,1%,METAL	2	R124,R125

©2011 Broadcast Electronics

BOM LEVEL	PART NO.	DESCRIPTION	QTY	REF. DES.
.....3	103-2675	RES,26.7K OHM,1/4W,1%,METAL	7	R8,R9,R23, R24,R101, R102,R133
.....3	103-2941	RES,2.94K OHM,1/4W,1%,METAL	1	R197
.....3	103-3245	RES,32.4K OHM,1/4W,1%,METAL	1	R63
.....3	103-3403	RES,340 OHM,1/4W,1%	3	R43,R46,R49
.....3	103-3405	RES,34K OHM,1/4W,1%,METAL	3	R77,R99, R115
.....3	103-3631	RES,365 OHM,1/4W,1%,METAL	1	R120
.....3	103-3841	RES,3.83K OHM,1/4W,1%,METAL	4	R141,R144, R153,R161
.....3	103-4325	RES,43.2K OHM,1/4W,1%,METAL	6	R44,R45,R47, R48,R50,R51
.....3	103-4645	RES,46.4K OHM,1/4W,1%,METAL	1	R184
.....3	103-4741	RES,4.75K OHM,1/4W,1%,METAL	4	R149,R131, R150,R186
.....3	103-4755	RES,47.5K OHM,1/4W,1%,METAL	1	R73
.....3	103-5112	RES,51.1 OHM,1/4W,1%,METAL	2	R55,R121
.....3	103-6655	RES,66.5K OHM,1/4W,1%,METAL	2	R100,R56
.....3	103-6815	RES,68.1K,1/4W,1%,METAL	1	R182
.....3	103-7541	RES,7.50K OHM,1/4W,1%,METAL	4	R126,R127, R128,R183
.....3	103-8453	RES,845 OHM,1/4W,1%,METAL	3	R71,R157, R84
.....3	103-8454	RES,8.45K OHM,1/4W,1%,METAL	2	R89,R90
.....3	103-9041	RES,9.09K OHM,1/4W,1%,METAL	3	R86,R87,R88
.....3	177-1054	RES,TRMR,10K,VERT ADJ	1	R62
.....3	177-2044	RES,TRMR,2K,VERT ADJ	1	R159
.....3	178-1044	RES,TRMR,1K OHM	3	R76,R189, R198
.....3	178-2044	RES,TRMR,2K,HORZ ADJ	1	R217
.....3	178-2054	RES,TRMR,20K	2	R41,R170
.....3	178-5045	RES,TRMR,5K,20T,VERT	1	R231
.....3	179-2043	RES,TRMR,2K,15 TURN 3006	1	R230
.....3	200-0009	DIODE,ZENER,1N 4739A	1	D68
.....3	200-0012	DIODE,ZENER,1N5243,13V,5%,500mW	10	D7,D9,D11, D13,D15,D17, D19,D21,D48, D50
.....3	200-4732	DIODE,ZENER,1N4732A	1	D69
.....3	201-2800	DIODE,HOT CARRIER	2	D4,D5
.....3	203-4005	DIODE,1N4005	1	D23
.....3	203-4148	DIODE,1N4148	42	D1,D2,D24, D25,D26,D27, D30,D31,D32, D33,D34,D35, D36,D37,D38, D39,D40,D41, D42,D43,D44, D45,D22,D29, D46,D51,D52, D53,D54,D55, D56,D57,D58,

©2011 Broadcast Electronics

BOM LEVEL	PART NO.	DESCRIPTION	QTY	REF. DES.
				D59,D60,D61, D62,D63,D64, D65,D66,D67
.....3	210-0511	TSTR,IRF511,POWER MOSFET	10	Q13,Q14,Q15, Q16,Q17,Q18, Q19,Q20,Q21, Q22
.....3	210-3906	2N3906 PNP 40V 2A .35W 250MHZ	1	Q5
.....3	210-7000	TSTR,2N7000,MOSFET	3	Q6,Q7,Q23
.....3	211-3904	TSTR,2N3904	2	Q3,Q4
.....3	212-0310	TSTR,FET N CHAN RF J3100	1	Q8
.....3	220-0212	IC,DG212CJ,QUAD SPST SWITCH	1	U7
.....3	220-0311	IC,LT311 LINEAR	2	U27,U43
.....3	220-0317	VR,LM317LZ TO92	3	U13,U24,U37
.....3	220-2123	IC,74LS123 DUAL MONOSTABLE	1	U28
.....3	220-4040	IC,MC14040B 12-BIT BINARY	1	U34
.....3	220-4060	IC,MC14060B 14-BIT COUNTER	1	U44
.....3	220-4106	IC,MC74HC14 HEX SCHMITT TRIGGR	1	U33
.....3	220-4240	IC,74C24ON,INVERTING TRI STATE	3	U19,U20,U45
.....3	220-4526	IC,MC14526 4-BIT COUNTER	1	U10
.....3	220-5151	IC,MC145151 SYNTHESIZER	1	U25
.....3	221-0072	AMP,OP,BIFET TLO72CP	13	U1,U2,U4,U5, U3,U6,U8,U9, U14,U15,U16, U17,U41
.....3	221-0319	IC,LM319N,COMPARATOR	2	U22,U47
.....3	221-0358	AMP,DUAL OP,LM358	1	U26
.....3	221-4002	IC,74HC4002N,DUAL 4-INPUT NOR	1	U31
.....3	221-4022	IC,74HC4022,OCTAL COUNTER	1	U29
.....3	221-4132	IC,74HC132N QUAD SCHMITT NAND	4	U30,U32,U38, U39
.....3	221-5534	IC,NE-5534AN	1	U12
.....3	221-7474	IC,74HC74N DUAL D FLIP FLOP	1	U42
.....3	221-7475	IC,74HC75N,QUAD D LATCH	1	U40
.....3	226-0392	RES NETWORK, 10K	2	R5,R20
.....3	227-2110	DRIVER HIGH AND LOW SIDE,IR2110	1	U46
.....3	228-4013	IC,MC14013B	2	U11,U36
.....3	228-4069	IC,CD4069CN	1	U21
.....3	228-4073	IC,MC14073B	1	U35
.....3	228-4538	IC,MC14538B NATL SEMICONDUCTOR	1	U23
.....3	320-0030	MOUNT,LED,R ANGLE,BIVAR	5	
.....3	323-9224	IND,LED,GRN,521-9270	5	DS1,DS2,DS3 DS4,DS5
.....3	340-0002	SW,4 POS,SPST,8-PIN DIP	1	S1
.....3	340-0003	SW,8 POS DIP,SPST	1	S2
.....3	340-0004	SW,JUMPER PROGRAMMABLE	18	P4,P5,P6A, P6B,P7,P12A, P12B,P13A, P13B,P14,P15 P16,P17,P18,

©2011 Broadcast Electronics

BOM LEVEL	PART NO.	DESCRIPTION	QTY	REF. DES.
				P19,P20,P21, P22
.....3	360-0049	COIL,22UH TORROID	4	L1,L2,L3,L4
.....4	360-0023	FERRITE CORE,TOROID .375X .187	1	
.....4	555-0049	LABOR ONLY 360-0049	1	
.....4	640-3000	WIRE,AWG 30 EN MAGNET GRN	0.001	
.....3	360-0093	COIL,MOLDED,SHIELDED,56UH	1	L5
.....3	364-2200	COIL, MOLDED 2.2UH	1	L6
.....3	400-2175	GROMMET,FOR 1/2	2	
.....3	413-0106	TERM,TEST POINT,OVAL,RED	23	E1,E2,E3,E4, TP1,TP2,TP3, TP4,TP5,TP6, TP7,TP8,TP9, TP10,TP11, TP12,TP13, TP14,TP15, TP16,TP17, TP18,TP19
.....3	417-0003	CONN,HEADER 3 PIN	5	J4,J5,J7,J21, J22
.....3	417-0071-001	JACK,PC .040PIN 1414 KEYSTONE	4	J8,J9,J10,J11
.....3	417-0188	CONN,80PIN FEM,DBL ROW,PCB MT	1	P101
.....3	417-0200	CONN,HEADER 20 PIN	0.7	J6,J12,J13
.....3	417-0804	SOCKET,8-PIN DIP,BURNDY	17	XU1,XU2,XU3 XU4,XU5,XU6 XU8,XU9, XU12,XU14, XU15,XU16, XU17,XU26, XU27,XU41, XU43
.....3	417-1404	SOCKET,14-PIN DIP	14	XU11,XU21, XU22,XU30, XU31,XU32, XU33,XU35, XU36,XU38, XU39,XU42, XU46,XU47
.....3	417-1604	SKT,16-PIN,DIP	8	XU7,XU10, XU23,XU28, XU34,XU40, XU29,XU44
.....3	417-2004	SOCKET,20-PIN,DIP,HIGH RELIABILITY	3	XU19,XU20, XU45
.....3	417-2804	SOCKET,IC 28-PIN,DIP,HI RELIABILITY	1	XU25
.....3	417-4004	CONN,HEADER,2 PIN	7	J14,J15,J16, J17,J18,J19, J20
.....3	421-1113	RIV,CLOSED-END .125 X .316L	4	
.....3	474-0165	PLATE,SHIELD VCO	1	

©2011 Broadcast Electronics

BOM LEVEL	PART NO.	DESCRIPTION	QTY	REF. DES.
.....3	517-0300	PCB MACH,ECU EXCITER,AM-1A (scan)	1	
.....3	917-0069	ASSY PCB.VCO MODL	1	
.....4	003-1013	CAP,MONO CER,.01uF,100V,5%	2	C1,C2
.....4	003-1054	CAP,CER,MNLY,.1uF,50V,20%	2	C3,C5
.....4	040-5013	CAP,MICA,50PF,500V,5%	1	C4
.....4	100-1031	RES,100 OHM,1/4W,1%,METAL	2	R2,R5
.....4	103-1062	RES,100K OHM,1/4W,1%,METAL	1	R4
.....4	103-4753	RES,475 OHM,1/4W,1%,METAL	2	R3,R6
.....4	103-6193	RES,619 OHM,1/4W,1%,METAL	1	R1
.....4	200-0115	DIODE,MVAM115 AM TUNING	1	D1
.....4	203-4148	DIODE,1N4148	2	D2,D3
.....4	212-0310	TSTR,FET N CHAN RF J3100	2	Q1,Q2,
.....4	360-0023	FERRITE CORE,TOROID .375X .187	1	
.....4	417-0119	PIN,.040 1218 KEYSTONE	4	P32,P33,P34, P35
.....4	420-6103	SCREW,6-32X.187,S.S. PH	1	
.....4	420-6104	SCREW,6-32X.250,S.S. PH	1	
.....4	423-6003	#6 LOCK INT TOOTH	1	
.....4	441-0013	STOFF,BRASS 1/4 RNDX 35850P	1	
.....4	471-0479-001	COVER,VCO MODIFIED	1	
.....4	517-0069	PCB,BLANK VCO MODL	1	
.....4	640-2600	WIRE,AWG 26,MAGNET,RED	0.004	
.....4	700-0027	POTTING COMPOUND	0.033	
....2	917-0301	ASSY PCB,ECU MOTHERBOARD,AM,A/E SERIES	1	
.....3	003-1066	CAP,CER,MNLY,.1uF,50V,10% *NOTE*	95	C9,C10,C11, C12,C13,C14, C15,C16,C17, C18,C19,C20, C21,C22,C23, C24,C25,C26, C27,C28,C29, C30,C31,C32, C33,C34,C35, C36,C37,C38, C39,C40,C41, C42,C43,C44, C45,C46,C47, C48,C49,C50, C51,C52,C53, C54,C55,C56, C57,C58,C59, C61,C62,C63, C64,C65,C67, C68,C69,C70, C71,C72,C73, C74,C75,C76, C77,C78,C79, C80,C81,C82, C83,C84,C91, C92,C93,C94, C95,C96,C97, C98,C99,

©2011 Broadcast Electronics

BOM LEVEL	PART NO.	DESCRIPTION	QTY	REF. DES.
				C100,C101, C102,C103, C104,C105, C106,C107, C108,C109, C85,C110
.....3	003-1523	CAP,MONO CER,.0015uF,100V,5%	4	C3,C4,C7,C8
.....3	023-1084	CAP,LYTIC,100MFD,35V,STDUP,RAD	1	C66
.....3	030-1532	CAP,POLY FILM,.015uF,100V,10%	3	C88,C89,C90
.....3	040-2223	CAP,MICA,220PF,500V,RAD	4	C1,C2,C5,C6
.....3	040-6824	CAP,MICA,680PF,300V,5%	2	C86,C87
.....3	100-1051	RES,10K OHM,1/4W,1%	1	R55
.....3	100-6031	RES,604 OHM,1/4W,1%	2	R5,R10
.....3	103-1021	RES,10 OHM,1/4W,1%,METAL	13	R74,R76,R85, R86,R87,R88, R89,R90,R91, R92,R93,R94, R95
.....3	103-1156	RES,1.15K OHM,1/4W,1%,METAL	37	R15,R16,R17, R18,R23,R24, R25,R26,R27, R28,R35,R36, R37,R38,R39, R40,R47,R48, R49,R50,R51, R56,R57,R60, R61,R62,R1, R4,R6,R9,R78 R79,R80,R81, R82,R83,R84
.....3	103-2003	RES,200 OHM,1/4W,1%,METAL	1	R58
.....3	103-3924	RES,3.92K OHM,1/4W,1%,METAL	2	R63,R64
.....3	103-4423	RES,442 OHM,1/4W,1%,METAL	8	R2,R3,R7,R8, R53,R54,R59, R75
.....3	103-5112	RES,51.1 OHM,1/4W,1%,METAL	25	R19,R20,R21, R22,R29,R30, R31,R32,R33, R34,R41,R42, R43,R44,R45, R46,R66,R67, R68,R69,R70, R71,R72,R77, R96
.....3	120-4723	RES,47 OHM,1W,5%	2	R65,R73
.....3	203-4005	DIODE,1N4005	1	D1

©2011 Broadcast Electronics

BOM LEVEL	PART NO.	DESCRIPTION	QTY	REF. DES.
.....3	340-0004	SW,JUMPER PROGRAMMABLE	1	P12
.....3	360-0047	CHOKE, 910UH, 5%	2	L5,L6
.....3	360-0093	COIL,MOLDED,SHIELDED,56UH	4	L1,L2,L3,L4
.....3	412-3000	BARR STP,30 POS,BEAU61-5-30-50	2	TB1,TB2
.....3	417-0203	CONN,BNC FLANGED PNL MT UG-290	1	J11
.....3	417-0254	CONN,HEADER 80P 2 ROW	2	J101,J302
.....3	417-0255	CONN,HEADER 50P 2 ROW 102567-6	2	J201,J301
.....3	417-0677	CONN,PCB MT,6PIN MALE	1	J7
.....3	417-2600	CONN,HEADER,26PIN	2	J9,J10
.....3	417-4004	CONN,HEADER,2 PIN	1	J12
.....3	417-4040	CONNECTOR, HEADER STRAIGHT POST	1	J8
.....3	418-2500	CONN,25PIN,D TYPE TO PC,ANGLE MT	3	P4,P5,P6
.....3	420-0300	SCREW,3-56X.187,S.S. PHH	4	
.....3	420-4105	SCREW,4-40X.312,S.S. PH	6	
.....3	420-4108	SCREW,4-40X.500,S.S. PH	4	
.....3	423-3003	WASHER,#3 SPLIT,SST	4	
.....3	423-4001	#4 FLAT SS .250 X .125 X .018	10	
.....3	423-4002	#4 LOCK S.S. SPLIT	10	
.....3	426-4003	NUT,PEM 4-40 KFS2-440	10	
.....3	426-4008	STOFF,PEM 4-40 KFSE-440-12	3	
.....3	517-0301	PCB MACH,ECU MOTHERBOARD,AM-1(scan)	1	
.....3	601-0022	WIRE,AWG22,BUSS	0.001	
.....3	693-0220	TUB,TEFLON,TW,AWG22 NTL	0.001	
....2	917-0306-001	ASSY PCB,ECU DISPLAY/CNTL SW,AM,A/E SERIES	1	
.....3	003-1066	CAP,CER,MNLY,.1uF,50V,10% *NOTE*	25	C1,C2,C3,C4, C5,C8,C11, C13,C16,C17, C18,C19,C20, C23,C29,C38, C39,C6,C7,C9 C10,C14,C15, C21,C22
.....3	023-1076	CAP,LYTIC,10uF,50V,STDUP	4	C24,C25,C33, C37
.....3	023-1084	CAP,LYTIC,100MFD,35V,STDUP,RAD	3	C30,C31,C32
.....3	024-1064	CAP,LYTIC,1UF,50V,RAD	1	C12
.....3	024-3335	CAP,LYTIC,33UF,35V,LOW LEAK	4	C26,C27,C34, C36
.....3	030-1033	CAP,CER MOLDED,.001UF,200V,10%	6	C28,C35,C40, C41,C42,C43
.....3	100-1041	RES,1K OHM,1/4W,1%	27	R11,R20,R59, R60,R61,R65, R64,R66,R69, R70,R71,R83, R84,R85,R88, R89,R90,R93,

©2011 Broadcast Electronics

BOM LEVEL	PART NO.	DESCRIPTION	QTY	REF. DES.
				R94,R95, R103,R49, R52,R53,R56, R30,R32
.....3	100-1051	RES,10K OHM,1/4W,1%	14	R15,R24,R50, R51,R54,R55, R16,R26,R28, R40,R46,R38, R44,R78
.....3	100-1083	RES,10MEG OHM,1/4W,5%	2	R39,R45
.....3	100-1231	RES,121 OHM,1/4W,1%	1	R74
.....3	100-1551	RES,15K OHM,1/4W,1%	2	R73,R80
.....3	100-1731	RES,174 OHM,1/4W,1%	1	R113
.....3	100-2283	RES,22MEG OHM,1/4W,5%	2	R12,R21
.....3	100-6031	RES,604 OHM,1/4W,1%	1	R75
.....3	103-1062	RES,100K OHM,1/4W,1%,METAL	13	R1,R2,R5,R8, R27,R29,R31, R37,R43,R6, R104,R105, R3
.....3	103-1105	RES,11K OHM,1/4W,1%,METAL	2	R4,R7
.....3	103-1214	RES,1.21K OHM,1/4W,1%,METAL	6	R58,R63,R68, R82,R87,R92
.....3	103-2211	RES,22.1K OHM,1/4W,1%,METAL	2	R13,R22
.....3	103-2216	RES,221K OHM,1/4W,1%,METAL	2	R14,R23
.....3	103-2241	RES,2.21K OHM,1/4W,1%,METAL	4	R17,R25,R41, R47
.....3	103-2431	RES,243 OHM,1/4W,1%,METAL	20	R33,R34,R35, R36,R76,R77, R96,R97,R98, R99,R100, R101,R102, R106,R107, R108,R109, R110,R111, R112
.....3	103-2435	RES,24.3K OHM,1/4W,1%,METAL	2	R9,R18
.....3	103-4993	RES,499 OHM,1/4W,1%,METAL	6	R57,R62,R67, R81,R86,R91
.....3	103-8253	RES,825 OHM,1/4W,1%,METAL	3	R10,R19, R114
.....3	103-8255	RES,82.5K OHM,1/4W,1%,METAL	2	R72,R79
.....3	175-1034	RES,TRMR,1K,VERT ADJ	2	R42,R48
.....3	200-4733	DIODE,ZENER,1N4733A, 5%	6	D12,D13,D14, D17,D18,D19
.....3	203-4005	DIODE,1N4005	4	D10,D11,D15, D16
.....3	203-4148	DIODE,1N4148	11	D1,D2,D3,D4, D5,D6,D7,D8, D9,D20,D21
.....3	210-0271	TSTR,FET J271	2	Q1,Q2
.....3	210-7000	TSTR,2N7000,MOSFET	4	Q3,Q4,Q5,Q6

©2011 Broadcast Electronics

BOM LEVEL	PART NO.	DESCRIPTION	QTY	REF. DES.
.....3	211-3904	TSTR,2N3904	1	Q7
.....3	220-0212	IC,DG212CJ,QUAD SPST SWITCH	2	U1,U7
.....3	221-0072	AMP,OP,BIFET TLO72CP	1	U6
.....3	221-0074	AMP,OP,BIFET TLO74CW	2	U3,U8
.....3	221-4227	AMP,DUAL OP	1	U2
.....3	227-0317	VR,LM317T,LM317KC	1	U14
.....3	228-4013	IC,MC14013B	1	U5
.....3	228-4584	IC,MC14584 14-PIN SCHMITT TRIG	1	U4
.....3	229-0555	IC,TIMER,NE555N	2	U12,U13
.....3	229-3914	DRIVER,DOT/BAR DISPLAY LM3914N	6	U9,U10,U11, U15,U16,U17
.....3	320-0031	LED,TRI-COLOR COMMON CATHODE	4	DS22,DS23, DS24,DS25
.....3	320-4164	LED ARRAY,GRN,10 BAR	4	DS8,DS9, DS11,DS12
.....3	320-7164	LED ARRAY RED MV57164 INTEN G OR H	2	DS7,DS10
.....3	323-9217	IND,LED,RED 521-9240	2	DS15,DS16
.....3	323-9224	IND,LED,GRN,521-9270	4	DS13,DS14, DS19,DS20
.....3	323-9225	IND,LED,YEL	4	DS1,DS2, DS17,DS18
.....3	340-0030	SW,SPDT,MOM MP SER,1 RED	2	S3,S11
.....3	340-0130	SW,SPDT,MOM MP SER,2 GRN,C&K	2	S1,S2
.....3	340-0161	SW,SPDT,MOM MP SER,1 GREEN	5	S6,S7,S8,S9, S10
.....3	340-0162	SW,SPDT,MOM MP SER,1 YELLOW	2	S4,S5
.....3	407-0074	SPR,LED .25 ODX.147 1D X.22L	10	
.....3	417-0804	SOCKET,8-PIN DIP,BURNDY	4	XU2,XU6, XU12,XU13
.....3	417-1404	SOCKET,14-PIN DIP	4	XU3,XU4,XU5 XU8
.....3	417-1604	SKT,16-PIN,DIP	2	XU1,XU7
.....3	417-1804	SOCKET,18-PIN,DIP,HIGH RELIABILITY	6	XU9,XU10, XU11,XU15, XU16,XU17
.....3	417-2600	CONN,HEADER,26PIN	1	J1
.....3	417-4040	CONNECTOR, HEADER STRAIGHT POST	1	J2
.....3	517-0306-001	PCB MACH,ECU DISPLAY/CNTL SW,(scan)	1	
.....4	517-0306	PCB MACH,ECU BREAKAWAY,AM-1A	0.38	
....2	917-0306-005	ASSY PCB,METER SWITCH,AM,A/E SERIES	1	
.....3	003-1066	CAP,CER,MNLY,.1uF,50V,10% *NOTE*	1	C501
.....3	103-1624	RES,1.62K OHM,1/4W,1%,METAL	2	R509,R510
.....3	103-2744	RES,2.74K OHM,1/4W,1%,METAL	1	R508
.....3	103-3014	RES,3.01K OHM,1/4W,1%,METAL	2	R504,R507
.....3	178-2044	RES,TRMR,2K,HORZ ADJ	2	R503,R506
.....3	178-5030	RES,TRMR,500 OHM,HORZ ADJ	2	R501,R505
.....3	178-5054	RES,TRMR,50K,HORZ ADJ	1	R511

©2011 Broadcast Electronics

BOM LEVEL	PART NO.	DESCRIPTION	QTY	REF. DES.
.....3	200-4733	DIODE,ZENER,1N4733A, 5%	1	D501
.....3	340-0134	SW,ROTARY 3 POS 2 POLE	2	S501,S502
.....3	417-0677	CONN,PCB MT,6PIN MALE	1	J501
.....3	418-0255	CONN,MALE,4PIN	1	J502
.....3	517-0306-005	PCB MACH,METER SWITCH,AM-1A	1	
.....4	517-0306	PCB MACH,ECU BREAKAWAY,AM-1A	0.07	
....2	947-0153	ASSY,HRNS,ECU,AM-1 (SBCM)	1	
.....3	410-1416	LUG,TERM,BENT,11/16	1	
.....3	410-1553	LUG,TERM #10 RING CRIMP 16-22	4	
.....3	410-2478	CRIMP TERMINAL,AMP 640707-1	6	
.....3	417-0053	SKT,CONN 641294-1 AMP	10	
.....3	417-0306	HSNG,3 POS,SL-156	1	P1
.....3	417-0606	HSNG,6 POS,SL-156	1	P2
.....3	418-0240	PLUG,FEM,4PIN	1	P502
.....3	418-0670	HOUSING,CONN,6PIN FEM	1	P7
.....3	418-2600	CONN,26-PIN,RIBBON	4	P1,P10,P3, P801
.....3	418-4001	CONN,RIBBON CBL,40COND	2	
.....3	600-0026	CBL,FLAT,26-COND,28GA	2.125	
.....3	600-0040	CBL,40COND,28GA,100 ANSLEY	2.125	
.....3	601-1800	WIRE,AWG18 19/30 BLK	12.5	
.....3	693-0002	SLVG,1/4 EXPANDO FR BLACK"	0.88	
..1	957-0010-101	ASSY, POWER MODULE, AMA'S/AME'S XMTR (note)	1	
....2	420-0108	SCREW,10-32X.500,S.S. PHH	2	
....2	420-6106	SCREW,6-32X.375,S.S. PH	20	
....2	421-6008	6-32 KEP NUT	6	
....2	421-8002	8-32 HEX NUT, BRASS	12	
....2	423-0002	#10 LOCK SPLIT	2	
....2	423-6002	#6 LOCK SPLIT	20	
....2	423-8005	#8 LOCK SPLIT	12	
....2	441-0013	STOFF,BRASS 1/4 RNDX 35850P	1	
....2	441-0062	STOFF,BRASS 1/4HEX X 25850P	4	
....2	441-0175	STOFF,#6X2.62,MF,3/8 L EXT THD	4	
....2	471-0831	SUPPORT,PCB,POWER MOD,AM XMTR	3	
....2	471-5061-100	PANEL,FRONT,POWER MOD,AM	1	
.....3	471-5061-009	PANEL,FRONT,POWER MOD,(UNSCREENED)	1	
....2	486-2285	HANDLE,OVAL,BLK,10-32 X 4	1	
....2	917-0302-100	ASSY, PCB, MODULATOR, AM XMTR	1	
.....3	200-1620	DIODE,FAST RECOVERY,16JPF20	2	D2,D3
.....3	210-9020	FET, MODULATOR, 200V, 94A	2	Q1,Q2
.....3	420-4108	SCREW,4-40X.500,S.S. PH	4	
.....3	420-6104	SCREW,6-32X.250,S.S. PH	2	
.....3	420-6105	SCREW,6-32X.312,S.S. PH	4	
.....3	420-8121	SCREW,8-32X.375,BR PH	6	
.....3	423-4001	#4 FLAT SS .250 X .125 X .018	4	
.....3	423-4002	#4 LOCK S.S. SPLIT	4	

©2011 Broadcast Electronics

BOM LEVEL	PART NO.	DESCRIPTION	QTY	REF. DES.
.....3	423-6002	#6 LOCK SPLIT	16	
.....3	423-8005	#8 LOCK SPLIT	6	
.....3	423-8006	#8 LOCK INT TOOTH	6	
.....3	441-0012	STOFF,#6-32 MALE-FEMALE 1/4	6	
.....3	441-0184	STOFF,6-32,MALE-FEMALE,3/8	4	
.....3	441-7982	STOFF,#8x.750,.375 HEX,BRASS W ZINC	6	
.....3	455-8000-001	HEATSINK,2 INCH,A" VERSION AM"	2	
.....3	580-126	Buss Wire, 18AWG Solid Tinned Copper	0.4	
.....3	611-3750	TUB,HT SHK,3/8	0.17	
.....3	917-0302-102	ASSY, PCB, MODULATOR, COMPONENT LEVEL AM XMTR	1	
.....4	003-1041	CAP,CER,MNLY,.1UF,100V,10%	13	C33,C2,C4, C11,C12,C17, C20,C26,C38, C39,C27,C46, C47
.....4	020-3374	CAP,LYTIC,33UF,25V,NP	1	C41
.....4	020-4773	CAP,LYTIC,47UF,35V,STDUP	1	C34
.....4	023-1076	CAP,LYTIC,10uF,50V,STDUP	12	C1,C18,C19, C35,C24,C29, C30,C31,C32, C40,C22,C28
.....4	024-2274	CAP,LYTIC,22UF,100V,STDUP	3	C3,C23,C25
.....4	030-1033	CAP,CER MOLDED,.001UF,200V,10%	3	C21,C36,C37
.....4	030-1530	CAP,POLY,1.5UF,400V,10%	2	C13,C14
.....4	030-2256	CAP,POLY,2.2uF,400V	1	C42
.....4	030-3353	CAP,POLY FILM,.033UF,200V,10%	4	C44,C50,C51, C53
.....4	030-4752	CAP., .47UF, 250V, 10%, POLY	1	C15
.....4	030-6843	CAP,POLY METAL,.068uF,250V,10%	2	C48,C52
.....4	031-1043	CAP,MYLAR FILM,.01UF,100V,RAD	2	C16,C54
.....4	033-4743	CAP,POLY FILM,.47UF,250V,OVAL	3	C6,C9,C43
.....4	042-8222	CAP,MICA,820PF,500V,5%	1	C45
.....4	046-0002	CAP,MICA,1000PF,350V,10%	2	C7,C10
.....4	100-1013	RES,1 OHM,1/4W,5%	1	R4
.....4	100-1031	RES,100 OHM,1/4W,1%,METAL	2	R54,R55
.....4	100-1041	RES,1K OHM,1/4W,1%	7	R14,R20,R26, R33,R40,R45, R39
.....4	100-1051	RES,10K OHM,1/4W,1%	7	R18,R23,R30, R47,R48,R49, R5
.....4	100-1231	RES,121 OHM,1/4W,1%	1	R34
.....4	100-3373	RES,3.3MEG OHM,1/4W,5%	4	R8,R53,R56, R57
.....4	100-4561	RES,453K OHM,1/4W,1%	2	R12,R58
.....4	100-8641	RES,8.66K OHM,1/4W,1%	1	R42
.....4	103-1007	RES,1 MEG OHM,1/4W,1%,METAL	1	R46
.....4	103-1021	RES,10 OHM,1/4W,1%,METAL	2	R9,R11
.....4	103-1062	RES,100K OHM,1/4W,1%,METAL	2	R27,R41

©2011 Broadcast Electronics

BOM LEVEL	PART NO.	DESCRIPTION	QTY	REF. DES.
.....4	103-1306	RES,130K OHM,1/4W,1%,METAL	1	R13
.....4	103-1331	RES,1.33K OHM,1/4W,1%,METAL	2	R1,R35
.....4	103-1551	RES,15.4K OHM,1/4W,1%,METAL	1	R51
.....4	103-2211	RES,22.1K OHM,1/4W,1%,METAL	1	R22
.....4	103-2241	RES,2.21K OHM,1/4W,1%,METAL	3	R17,R25,R32
.....4	103-3323	RES,332 OHM,1/4W,1%,METAL	1	R3
.....4	103-3326	RES,332K OHM,1/4W,1%,METAL	3	R15,R24,R31
.....4	103-3641	RES,3.65K OHM,1/4W,1%,METAL	3	R10,R19,R29
.....4	103-4755	RES,47.5K OHM,1/4W,1%,METAL	1	R38
.....4	103-4996	RES,499K OHM,1/4W,1%,METAL	1	R43
.....4	103-6985	RES,69.8K OHM,1/4W,1%,METAL	2	R16,R28
.....4	103-8254	RES,8.25K OHM,1/4W,1%,METAL	1	R44
.....4	110-3923	RES,39 OHM,1/2W,5%	1	R52
.....4	110-4733	RES,470 OHM,1/2W,5%	1	R2
.....4	120-2753	RES,27K OHM,1W,5%	1	R21
.....4	130-1253	RES,12K OHM,2W,5%	1	R7
.....4	200-0009	DIODE,ZENER,1N 4739A	2	D7,D17
.....4	200-0019	DIODE,SCHOTTKY,20V,IA,IN5817	2	D24,D25
.....4	200-4733	DIODE,ZENER,1N4733A, 5%	1	D1
.....4	201-4728	DIODE,ZENER,1N4728	1	D18
.....4	203-4005	DIODE,1N4005	7	D4,D6,D8,D9, D14,D15,D19
.....4	203-4148	DIODE,1N4148	6	D5,D12,D13,D 16,D20,D21
.....4	206-6276	TRANSZORB DIODE,IN6276A 15V	1	D10
.....4	220-4093	IC,MC14093B SCHMITT NAND	1	U6
.....4	220-4421	IC,DRIVER,TC4421CAT 2A	1	U2
.....4	220-6137	IC,OPTO-ISOLATOR,6N137	1	U1
.....4	221-0339	IC,LM339A,VOLT COMPARATOR	1	U3
.....4	226-2004	MC1416,ULN2004 7-DRLNGTNS DP16	1	U5
.....4	227-0317	VR,LM317T,LM317KC	1	U10
.....4	228-4044	IC, QUAD R-S LATCHES	1	U7
.....4	228-4504	IC,HEX LEVEL SHIFTER,DUAL 16(NOTE)	1	U11
.....4	229-0033	IC,OPTOIS,4N33	4	U4,U8,U9,U12
.....4	230-0014	RECT,PWR SWITCHMODE,MUR460	1	D11
.....4	270-1213	REL,SPST,30A	1	K1
.....4	320-0030	MOUNT,LED,R ANGLE,BIVAR	4	
.....4	323-9217	IND,LED,RED 521-9240	2	DS2,DS4
.....4	323-9224	IND,LED,GRN,521-9270	2	DS1,DS3
.....4	330-2000	FUSE,20A 250V	1	F1
.....4	334-0100	FUSE,1A MDL SLO BLO 250V	1	F2
.....4	340-0004	SW,JUMPER PROGRAMMABLE	4	P5,P6,P7,P8
.....4	413-0106	TERM,TEST POINT,OVAL,RED	4	TP1,TP2,TP3, TP4
.....4	415-2068	CLIP,FUSE,15AMP,LITTLEFUSE,102 071	2	XF2
.....4	415-2068-030	CLIP,FUSE,30AMP,LITTLEFUSE,122 083	2	XF1
.....4	417-0004	JACK,TEST,RIGHT ANGLE PC MT	2	TP5,TP6
.....4	417-0374	CONN,15 PIN SUB-D,MALE7690 E	1	P2

©2011 Broadcast Electronics

BOM LEVEL	PART NO.	DESCRIPTION	QTY	REF. DES.
.....4	417-0600	SKT,IC 6 PIN	4	XU4,XU8,XU9 XU12
.....4	417-0804	SOCKET,8-PIN DIP,BURNDY	1	XU1
.....4	417-1404	SOCKET,14-PIN DIP	2	XU3,XU6
.....4	417-1604	SKT,16-PIN,DIP	3	XU5,XU7, XU11
.....4	417-4004	CONN,HEADER,2 PIN	4	J5,J6,J7,J8
.....4	420-4104	SCREW,4-40X.250,S.S. PH	2	
.....4	426-4003	NUT,PEM 4-40 KFS2-440	2	
.....4	426-8008	STUD,PEM,KFH-832-5ET,PCB MOUNT	6	
.....4	455-0071	HEATSINK,CLIP-ON,PCB MT,TO-220	1	
.....4	517-0302-100	PCB, MACH, MODULATOR, AM1A	1	
.....4	640-1001	WIRE, 10 GA, TIN PLATED	0.073	
.....3	917-0302-103	ASSY, PCB, MODULATOR COIL, AM XMTR (SBCM)	1	
.....4	360-0130	COIL, 18.3 UH, MOD PWM (SBCM)	2	
.....5	360-0080	BOBBIN,FERROX,4229F1D	1	
.....5	360-0081	CORE SET,Ferrite 160 (N)	1	
.....5	375-0302	TAPE,3/4W,72YD,#56 SCOTCH	1	
.....5	640-1200	WIRE,12GA,MAGNET	0.001	
.....5	693-0090	TUB,TEFLON,STANDARD,AWG9,NT L	0.083	
.....4	360-0131	COIL, 2.8 UH, MOD PWM (SBCM)	1	
.....5	360-0080	BOBBIN,FERROX,4229F1D	1	
.....5	360-0081	CORE SET,Ferrite 160 (N)	1	
.....5	375-0302	TAPE,3/4W,72YD,#56 SCOTCH	1	
.....5	640-1000	WIRE,10GA,MAGNET	0.001	
.....5	693-0090	TUB,TEFLON,STANDARD,AWG9,NT L	0.083	
.....4	360-0132	COIL, 7.5 UH, MOD PDWM (SBCM)	1	
.....5	360-0080	BOBBIN,FERROX,4229F1D	1	
.....5	360-0081	CORE SET,Ferrite 160 (N)	1	
.....5	375-0302	TAPE,3/4W,72YD,#56 SCOTCH	1	
.....5	640-1000	WIRE,10GA,MAGNET	0.001	
.....5	693-0090	TUB,TEFLON,STANDARD,AWG9,NT L	0.083	
.....4	420-0521	SCREW,10-32X1-1/2,NYLON,RND HD	4	
.....4	421-0901	#10 NYLON NUT	4	
.....4	517-0302-103	BLANK PCB, AM COIL ASSEMBLY	1	
.....3	917-0302-105	ASSY, PCB, MODULATOR CAP BOARD	2	
.....4	013-3385-200	CAP,LYTIC,330UF,200V,+/- 20%,10000HRS,105°C,RAD	4	C1,C2,C3,C4
.....4	111-0002	.02 OHM 3W CURRENT SENSE RES, SMT	1	R1
.....4	517-0302-105	PCB, MACH, MODULATOR CAP BOARD	1	
.....4	690-0221	TUB,BLK HEAT SHRINK 3/4	0.5	

©2011 Broadcast Electronics

BOM LEVEL	PART NO.	DESCRIPTION	QTY	REF. DES.
....2	917-0304	ASSY PCB,POWER AMP,AM,A/E SERIES	2	
.....3	002-1034	CAP,CER,DISC,.001UF,1000V	1	C26
.....3	003-1041	CAP,CER,MNLY,.1UF,100V,10%	10	C29,C30,C3, C4,C5,C6,C31 C32,C12,C34
.....3	003-1065	CAP,CER,MNLY,0.1UF,200V,10%	4	C1,C7,C27, C28
.....3	003-1066	CAP,CER,MNLY,.1uF,50V,10% *NOTE*	7	C11,C15,C8, C19,C20,C21, C2
.....3	003-4743	CAP,CER MNLY,.47uF,50V,10%	3	C38,C39,C58
.....3	015-1084	CAP,LYTIC,100UF,63V	1	C13
.....3	023-1076	CAP,LYTIC,10uF,50V,STDUP	4	C25,C24,C33, C59
.....3	023-1084	CAP,LYTIC,100MFD,35V,STDUP,RAD	1	C10
.....3	024-1064	CAP,LYTIC,1UF,50V,RAD	4	C40,C41,C42, C43
.....3	030-1033	CAP,CER MOLDED,.001UF,200V,10%	3	C16,C17,C18
.....3	030-1043	CAP,CER MOLDED,.01uF,200V,RAD	1	C23
.....3	042-3912	CAP,MICA,39PF,500V,5%	2	C36,C37
.....3	100-1031	RES,100 OHM,1/4W,1%,METAL	3	R4,R32,R33
.....3	100-1051	RES,10K OHM,1/4W,1%	11	R2,R3,R6,R21 R7,R26,R34,R 35,R39,R40
.....3	100-1083	RES,10MEG OHM,1/4W,5%	1	R23
.....3	100-2723	RES,27 OHM,1/4W,5%	4	R8,R9,R10, R11
.....3	100-3373	RES,3.3MEG OHM,1/4W,5%	2	R13,R16
.....3	103-1104	RES,1.10K OHM,1/4W,1%,METAL	3	R5,R14,R18
.....3	103-1964	RES,1.96K OHM,1/4W,1%,METAL	2	R24,R20
.....3	103-2674	RES,2.67K OHM,1/4W,1%,METAL	2	R30,R31
.....3	103-3323	RES,332 OHM,1/4W,1%,METAL	2	R27,R28
.....3	103-5623	RES,562 OHM,1/4W,1%,METAL	1	R38
.....3	110-6833	RES,680 OHM,1/2W,5%	1	R25
.....3	120-0200	RES, 0.2 OHMS, 1W, METAL OXIDE	2	R17,R19
.....3	120-1043	RES,1K OHM,1W,5%	2	R1,R15
.....3	130-1553	RES,15K OHM,2W,5%	1	R12
.....3	130-3004	RES,300 OHM,2W,5%,WW	3	R29,R36,R37
.....3	200-0024	DIODE,ZENER,24V,1W,5%,1N4749A	2	D20,D21
.....3	200-4742	DIODE,ZENER,1N4742A	2	D29,D30
.....3	200-5343	ZENER, 7.5V, 5W	1	D31
.....3	201-0035	DIODE,ZENER,1N5229 4.3V 0.5W	1	D11
.....3	203-4005	DIODE,1N4005	2	D22,D23
.....3	203-4148	DIODE,1N4148	12	D1,D2,D3,D4, D5,D6,D25, D26,D32,D33, D34,D35
.....3	206-0027	TRANSZORB DIODE, 27 VOLT	2	D9,D10
.....3	206-0250	TRANSZORB,250BV,1.5KE250CA	2	D17,D19
.....3	206-0300	TRANSZORB,300V ,SMD	2	D16,D18

©2011 Broadcast Electronics

BOM LEVEL	PART NO.	DESCRIPTION	QTY	REF. DES.
.....3	210-0120	TSTR,TIP120 NPN SILICON PWR	1	Q7
.....3	210-0520	HEXFET IRFI520G	4	Q3,Q4,Q5,Q6
.....3	210-3906	2N3906 PNP 40V 2A .35W 250MHZ	1	Q11
.....3	210-6018	RF FET 150 mOHM 600V (N)	2	Q1,Q2
.....3	211-3904	TSTR,2N3904	1	Q12
.....3	227-0317	VR,LM317T,LM317KC	1	U1
.....3	227-2110	DRIVER HIGH AND LOW SIDE,IR2110	2	U7,U8
.....3	228-4584	IC,MC14584 14-PIN SCHMITT TRIG	1	U5
.....3	229-0033	IC,OPTOIS,4N33	3	U2,U3,U4
.....3	237-0006	SCR,100V 1.6A RMS	1	Q13
.....3	320-0030	MOUNT,LED,R ANGLE,BIVAR	2	LD1,LD2
.....3	323-9217	IND,LED,RED 521-9240	1	DS2
.....3	323-9224	IND,LED,GRN,521-9270	1	DS1
.....3	330-1502	FUSE,3AB,15A,65V,VERY FAST	1	F1
.....3	334-1150	FUSE,5 X 20MM,1.5A,SLO-BLO	2	F2,F3
.....3	360-0112	COIL 4UH (SBCM)	2	L1,L2
.....4	360-0087	CORE,TOROID	1	
.....4	555-0112	COST, LABOR, 360-0112	1	
.....4	640-2200	WIRE,AWG 22,MAGNET	0.004	
.....3	415-2068-030	CLIP,FUSE,30AMP,LITTLEFUSE,122083	2	FC1,FC2
.....3	415-2069	CLIP,FUSE,LITTLEFUSE,111501	4	FC3,FC4,FC5,FC6
.....3	417-0374	CONN,15 PIN SUB-D,MALE7690 E	1	P2
.....3	417-0600	SKT,IC 6 PIN	3	XU2,XU3,XU4
.....3	417-1404	SOCKET,14-PIN DIP	3	XU7,XU8,XU5
.....3	420-4104	SCREW,4-40X.250,S.S. PH	2	
.....3	420-4106	SCREW,4-40X.375,S.S. PH	4	
.....3	420-4108	SCREW,4-40X.500,S.S. PH	2	
.....3	420-6104	SCREW,6-32X.250,S.S. PH	6	
.....3	421-8002	8-32 HEX NUT, BRASS	6	
.....3	423-4001	#4 FLAT SS .250 X .125 X .018	6	
.....3	423-4002	#4 LOCK S.S. SPLIT	6	
.....3	423-6002	#6 LOCK SPLIT	12	
.....3	423-8013	#8 LOCK EXT TOOTH (BRONZE)	6	
.....3	426-4003	NUT,PEM 4-40 KFS2-440	2	
.....3	426-8007	STUD,PEM,KFH-832-8ET,PCB MOUNT	4	E3,E4,E5,E6
.....3	441-0012	STOFF,#6-32 MALE-FEMALE 1/4	6	
.....3	455-0071	HEATSINK,CLIP-ON,PCB MT,TO-220	2	
.....3	455-8001-001	HEATSINK,4 INCH,A" VERSION AM"	2	
.....3	517-0304	PCB MACH,POWER AMP,AM-1A	1	
.....3	700-0015	ADH,LOCTITE,242 250CC	0.001	
.....3	700-0028	COMPOUND,THERM JT,TYPE 120	0.001	
..1	957-0064-500	ASSY,OUTPUT NETWORK,AM-500A	1	
....2	140-0021	VARISTOR BLOCK, 275VRMS, 350VDC	3	
....2	330-0201	FUSE,MDA 2A 250V SLO-BLO	2	
....2	339-0024	RFI FILTER,30VB6	1	
....2	341-0032	CKT BRKR,15A 2 POLE 250VAC	1	

©2011 Broadcast Electronics

BOM LEVEL	PART NO.	DESCRIPTION	QTY	REF. DES.
....2	370-2363	CHOKE, 3.6MHY, AM XMTR	1	
....2	370-2364	CHOKE,1.04MHY,AM XMTR	1	
....2	376-0047-101	XFMR ASSEMBLY, AM POWER SUPPLY	1	
.....3	376-0047-001	XMFR,AM XMTR POWER SUPPLY	1	
.....3	402-0000	TY-RAP	4	
.....3	417-0036	PIN CONN,AMP,350967-1	2	
.....3	417-0053	SKT,CONN 641294-1 AMP	10	
.....3	418-0702	HSNG,PIN 2 PIN 1-640507 AMP	1	
.....3	418-1271	CONN,HOUSING,12PIN	1	
....2	380-9001	FAN,PATRIOT,230 VAC	1	
....2	400-0055	ISOLATOR,ADH BACKED,.063 X .75	16	
....2	400-6700	GROMMET STRIP,.062-.090	2.15	
....2	402-0000	TY-RAP	6	
....2	402-0008	MTG DEVICE,FOR #6SCR,TIE CBL	8	
....2	402-0053	WIRE TIE,2 1/8	2	
....2	407-0173	FILTER,AIR,FXA 7.50x7.50"x.86""	1	
....2	409-0026	CARD GUIDE,6	12	
....2	410-1412	LUG,SOLD #4 5/8	1	
....2	412-0090	BARR STP,9 POS 7/16	1	
....2	415-2012	FUSEHOLDER,PANEL MOUNT, 10A	2	
....2	417-0203	CONN,BNC FLANGED PNL MT UG-290	1	
....2	417-0204	RECP,UG/58 TYPE	1	
....2	418-0320-100	CONN,2POLE 3WIRE,20A,250V,MALE	1	
....2	420-0000	SCREW,W/CAPT WASH 10-32X1/2BLK (NOTE	3	
....2	420-0108	SCREW,10-32X.500,S.S. PHH	14	
....2	420-0110	SCREW,10-32X.625,S.S. PHH	2	
....2	420-0496	SCREW,10-32X.375,BLACK SHSS	1	
....2	420-0500	SCREW,10-32X.375,BR PH	6	
....2	420-0509	SCREW,10-32X.500,BR SL PAN HD	1	
....2	420-0600	SCREW,3-56x.312,PHL, SS	3	
....2	420-0705	SCREW,10-32X.312,BR PH PA	9	
....2	420-4012	SCREW,3-56X.500,BR PH PAN HD	1	
....2	420-4106	SCREW,4-40X.375,S.S. PH	4	
....2	420-6124	SCREW,6-32X1.500,S.S. PH	8	
....2	420-6130	SCREW,6-32X.375,NYLON SL PAN HD	1	
....2	420-6203	SCREW,6-32X.3125,PH PAN HD SC	4	
....2	420-6506	SCREW,6-32X.375,S.S. PH FH	6	
....2	420-8106	SCREW,8-32X.375,S.S. PHH	4	
....2	420-8111	SCREW,8-32X.500,BR PH	2	
....2	420-8121	SCREW,8-32X.375,BR PH	2	
....2	421-0005	10-32 S.S. ELASTIC STOP NUT	8	
....2	421-0102	10-32 KEP NUT	18	
....2	421-0801	#10-32 BR HEX NUT	10	
....2	421-1003	1/4-20 HEX NUT	2	
....2	421-1113	RIV,CLOSED-END .125 X .316L	12	
....2	421-3002	3-56 BR HEX NUT	1	

©2011 Broadcast Electronics

BOM LEVEL	PART NO.	DESCRIPTION	QTY	REF. DES.
....2	421-4008	4-40 KEP NUT	8	
....2	421-6008	6-32 KEP NUT	7	
....2	421-6908	SHEET EDGE CONNECTOR 6-32	41	
....2	421-8002	8-32 HEX NUT, BRASS	23	
....2	421-8003	8-32 KEP NUT	1	
....2	422-6106	SCREW,SEMS 6-32 X 3/8 PAN PH. ST."	26	
....2	422-6107	SCREW,SEMS 6-32 X 7/16 PAN PH.ST."	65	
....2	422-8108	SCREW, SEMS, 8-32 X 1/2, PAN HEAD"	1	
....2	423-0002	#10 LOCK SPLIT	2	
....2	423-0005	#10 LOCK SPLIT (BRONZE)	20	
....2	423-0006	#10 FLAT .44 X .20 X .034	5	
....2	423-0007	#10 LOCK INT TOOTH	6	
....2	423-0008	1/4 FLAT .565 X .260 X .040	8	
....2	423-1003	1/4-20 LOCK SPLIT	2	
....2	423-3010	#3 SPLIT LOCK (BRONZE)	4	
....2	423-6002	#6 LOCK SPLIT	23	
....2	423-6006	#6 FLAT, 0.75 O.D, 0.140 I.D., 0.062 THK, SST	2	
....2	423-6011	#6 FLAT .310 X .160 X .030	6	
....2	423-6015	#6 FLAT .320 X .145 X	1	
....2	423-8005	#8 LOCK SPLIT	20	
....2	423-8006	#8 LOCK INT TOOTH	26	
....2	441-2114	STOFF,ALUM 1/4HEX X 1 6-32	3	
....2	441-8153	SPR,.25 HEX X .31LG,6-32 THD	2	
....2	441-8217	STOFF,ALUM 1/4HEX X 5/8 6-32	6	
....2	441-8292	STOFF,BRASS MALE-FEM 1/4HX1.75	4	
....2	441-8452	STOFF,8-32FF,2.5L,.25 HEX ALUM	2	
....2	450-1701	PLUG,HOLE,7/8	1	
....2	459-0189	BALL,SPARK GAP	2	
....2	459-0191	BLOCK,SPARK GAP	1	
....2	459-0192	THREADED SHAFT,SPARK GAP	1	
....2	463-0116	STRAP,MOV CHASSIS GND	1	
....2	469-0366-1	STRIP,RFI SHIELD 1.25	2	
.....3	469-0366	FINGER STOCK (NOTE!!!!!)	1.25	
....2	471-0866	PANEL,BREAKAWAY,1 PER AM XMTR	1	
....2	471-2009	GUARD,EDGE CARD CONN,PWR BLK AM500	1	
....2	471-2010	GUARD,FLAT,POWER BLOCK, AM500	1	
....2	471-5050-001	PANEL,FRONT,AM-500A	1	
.....3	471-5050-009	PANEL,FRONT,AM-1A(UNSCREENED)	1	
....2	471-5051	PANEL,REAR,AM-1A	1	
....2	471-5052	CHASSIS,AM-1A	1	
....2	471-5053	PANEL,LEFT SIDE,AM-1A	1	
....2	471-5054	COVER,TOP,AM-1A	1	
....2	471-5055	ENCLOSURE,AM-1A	1	

©2011 Broadcast Electronics

BOM LEVEL	PART NO.	DESCRIPTION	QTY	REF. DES.
....2	471-5056	PARTITION,AM-1A	1	
.....3	471-5056-009	PARTITION,AM1A (UNSCREENED)	1	
....2	471-5057	TOP,POWER BLOCK,AM-1A	1	
....2	471-5058	BOTTOM,POWER BLOCK,AM-1A	1	
....2	471-5060	AIR DAM,AM-1A	1	
....2	471-5062	PLATE,CAPACITOR MOUNTING, AM-1A	1	
....2	471-5063	STRAP,LIGHTNING PROTECTION PCB,AM-1	1	
....2	471-5494	SUPPORT,SPARK GAP	1	
....2	500-211	Screw,SEMS 4-40x3/8 Ph Pan Head MS Black Zinc (External)	2	
....2	592-0179	PLATE,DANGER,AM XMTRS	1	
.....3	592-0004-009	WARNING PLATE,UNSCREENED	1	
....2	594-0019	LABEL,DANGER HV 1X 1.5	1	
....2	594-0073	LABEL,WARNING ROTATING FANS	1	
....2	594-0500	LABEL,DANGER	1	
....2	917-0216	ASSY,PCB,LGHTNG PROTECTION BD	1	
.....3	206-0300	TRANSZORB,300V ,SMD	1	D2
.....3	206-0400	TRANSZORB,400BV,1.5KE400CA	2	D1,D3
.....3	517-0216	PCB MACH,LIGHTNING PROTECTION	1	
....2	917-0303-001	ASSY PCB,PWR BLOCK MTHRBD,AM-1A	1	
.....3	003-1066	CAP,CER,MNLY,.1uF,50V,10% *NOTE*	1	C2
.....3	030-2256	CAP,POLY,2.2uF,400V	1	C4
.....3	370-0037	XMFR,P.A. DRIVE,AM-1/5	1	T1
.....4	375-0008	CORE,RF DRIVE TRANSFORMER	1	
.....4	555-0035	COST,LABOR 370-0037	1	
.....4	601-2411	WIRE,AWG 24, TFE, 250V, ORANGE	2	
.....4	601-2412	WIRE, AWG 24, TFE, 250V, BLUE	2	
.....4	601-2419	WIRE,AWG24,TFE,250V,WHT	2	
.....3	417-0300	SOCKET,CARD EDGE,AMP 531353-6	3	J1D,J1E,J1F
.....3	417-0375	CONN,15 PIN SUB-D,FEMALE	3	J2D,J2E,J2F
.....3	417-2401	CONN,PCB,MR,MALE,24-PIN,AMP	1	J3
.....3	426-8007	STUD,PEM,KFH-832-8ET,PCB MOUNT	7	E11,E12,E13, E14,E15,E16, E23
.....3	517-0303-001	PCB MACH,PWR BLOCK MTHRBD,AM-1A	1	
.....4	517-0303	PCB MACH,PWR BLOCK MTHRBD	1	
.....3	601-0022	WIRE,AWG22,BUSS	0.6	
....2	917-0306-002	ASSY PCB,DIRECTIONAL COUPLER,AM,A/E SERIES	1	
.....3	003-1066	CAP,CER,MNLY,.1uF,50V,10% *NOTE*	16	C202,C203, C204,C205, C206,C207, C208,C209, C210,C211, C212,C213, C214,C215,

©2011 Broadcast Electronics

BOM LEVEL	PART NO.	DESCRIPTION	QTY	REF. DES.
				C216,C217
.....3	030-1043	CAP,CER MOLDED,.01uF,200V,RAD	1	C201
.....3	031-2033	CAP,MYLAR FILM,.0022uF,100V,10%	2	C219,C220
.....3	042-5021	CAP,MICA,500PF,500V,1%	1	C218
.....3	103-1021	RES,10 OHM,1/4W,1%,METAL	4	R226,R227, R228,R229
.....3	103-3011	RES,30.1 OHM,1/4W,1%,METAL	6	R206,R210, R211,R212, R213,R214
.....3	120-1531	RES,150 OHM,1W,1%,(MIL 1/2W)	4	R230,R231, R232,R233
.....3	120-2031	RES,200 OHM,1W,1%,MIL 1/2W	12	R215,R216, R217,R218, R219,R220, R221,R222, R236,R237, R238,R239
.....3	130-1821	RES,18 OHM,3W,1%	3	R207,R208, R209
.....3	178-2056	RES,TRMR,20K,1W,HORZ,22 TURN	4	R223,R224, R234,R235
.....3	192-2533	POT,250 OHM,2W,DOUBLE,1-TURN	5	R201,R202, R203,R204, R205
.....3	200-0024	DIODE,ZENER,24V,1W,5%,1N4749A	4	D209,D210, D213,D214
.....3	201-2800	DIODE,HOT CARRIER	4	D201,D202, D203,D204
.....3	203-4148	DIODE,1N4148	8	D205,D206, D207,D208, D211,D212, D215,D216
.....3	270-0062	REL,SPST 5VDC 500 OHM,REED	5	K201,K202, K203,K204, K205
.....3	340-0002	SW,4 POS,SPST,8-PIN DIP	1	S201
.....3	340-0004	SW,JUMPER PROGRAMMABLE	6	P203,P204A, P204B.P205A, P205B,P206
.....3	360-0093	COIL,MOLDED,SHIELDED,56UH	1	L202
.....3	364-0056	COIL,MOLDED,SHIELDED 5.6UH	1	L201
.....3	364-0670	CHOKE,10MHY	2	L203,L204
.....3	370-0040	XFMR,CURRENT,AM-1/5 (SBCM)	2	R201,T202
.....4	375-0009	CORE,1.102 ODX.63 IDX.512 THK	1	
.....4	555-0040	COST,LABOR 370-0040	1	
.....4	640-2600	WIRE,AWG 26,MAGNET,RED	0.005	
.....4	640-2600-1	WIRE,AWG 26,MAGNET,GRN	0.006	
.....4	700-0003	TAPE,ELECTRICAL,YEL,3/8	0.01	
.....3	370-0041	XFMR,VOLTAGE,AM-1/5	1	T203
.....4	375-0007-100	CORE, RF TRANSFORMER	1	
.....4	555-0041	COST,LABOR 370-0041	1	

©2011 Broadcast Electronics

BOM LEVEL	PART NO.	DESCRIPTION	QTY	REF. DES.
.....4	601-2410	WIRE,AWG24,TFE,250V,BLK	8	
.....4	601-2411	WIRE,AWG 24, TFE, 250V, ORANGE	1	
.....4	601-2412	WIRE, AWG 24, TFE, 250V, BLUE	0.5	
.....4	601-2419	WIRE,AWG24,TFE,250V,WHT	10	
.....4	700-0103	TAPE,KAPTON 1/2" 0.010 "		
.....3	402-0001	TY-RAP,T+B TY24M,1-1/4 DIA	6	
.....3	410-0025	TERM,MALE DISCONNECT PC .25TAB	3	E209,E210, E211
.....3	413-0025	TERM,TURRET,2 SHLDR,.360,GOLD FLASH	17	E202,E203, E204,E205, E206,E207, E208,E212, E213,E214, E215,E216, E217,E219, E220,E221
.....3	417-0080-001	HEADER,8 POS R.ANGLE	1	J202,J203
.....3	417-0200	CONN,HEADER 20 PIN	2	J201,J204, J205,J206
.....3	517-0306-002	PCB MACH,DIRECTIONAL COUPLER,(scan)	1	
.....4	517-0306	PCB MACH,ECU BREAKAWAY,AM-1A	0.312	
.....3	693-0220	TUB,TEFLON,TW,AWG22 NTL	0.5	
....2	917-0306-007	ASSY PCB,AC SAMPLE,AM,A/E SERIES	1	
.....3	033-4763	CAP,POLY FILM,.47UF,600V,OVAL	1	C701
.....3	100-3373	RES,3.3MEG OHM,1/4W,5%	1	R707
.....3	103-1561	RES,150K OHM,1/4W,1%,METAL	6	R701,R702, R703,R704, R705,R706
.....3	203-4005	DIODE,1N4005	4	D701,D702, D703,D704
.....3	410-0025	TERM,MALE DISCONNECT PC .25TAB	2	E701,E702
.....3	417-0700	CONN,PCB MT,2PIN	1	J701
.....3	517-0306-007	PCB MACH,AC SAMPLE,AM-1A	1	
.....4	517-0306	PCB MACH,ECU BREAKAWAY,AM-1A	0.022	
.....3	611-0060	TUB, HT SHK, 1/16	1.5	
....2	917-0306-009	ASSY PCB,TEMPERATURE SENSOR,AM,A/E SERIES	1	
.....3	002-1034	CAP,CER,DISC,.001UF,1000V	1	C907
.....3	003-1066	CAP,CER,MNLY,.1uF,50V,10% *NOTE*	2	C902,C906
.....3	100-1051	RES,10K OHM,1/4W,1%	2	R901,R903
.....3	103-2241	RES,2.21K OHM,1/4W,1%,METAL	1	R902
.....3	220-0035	IC,LM35DZ CELSIUS TEMP SENSOR	1	U901
.....3	413-1597	TERM,TURRET,2 SHLDR,.219,GOLD FLASH	2	TP901,TP902
.....3	418-0255	CONN,MALE,4PIN	1	J901
.....3	517-0306-009	PCB MACH,TEMPERATURE SENSOR,AM-1A	1	
.....4	517-0306	PCB MACH,ECU BREAKAWAY,AM-	0.015	

©2011 Broadcast Electronics

BOM LEVEL	PART NO.	DESCRIPTION	QTY	REF. DES.
		1A		
....2	917-0306-014	ASSY,PCB,LIGHTNING DET,AM1A	1	
.....3	042-3913	CAP,MICA,1000PF,500V	20	C401,C402, C403,C404, C405,C406, C407,C408, C409,C410, C411,C412, C413,C414, C415,C416, C417,C418, C419,C420
.....3	215-0001	PHOTOTRANSISTOR,1.8MA IC AT 5V	1	Q401
.....3	340-0004	SW,JUMPER PROGRAMMABLE	3	P403,P404, P405
.....3	410-0025	TERM,MALE DISCONNECT PC .25TAB	3	E201,E202, E203
.....3	417-0200	CONN,HEADER 20 PIN	0.2	402
.....3	417-4004	CONN,HEADER,2 PIN	4	J403,J404, J405,J401
.....3	517-0306-004	PCB MACH,LIGHTNING DETECTOR,AM-1A	1	
.....4	517-0306	PCB MACH,ECU BREAKAWAY,AM-1A	0.067	
....2	917-0315-001	ASSY PCB,POWER SUPPLY,AM XMTRS (SBCM) (NOTE)	1	
.....3	003-1013	CAP,MONO CER,.01uF,100V,5%	7	C2,C10,C59, C60,C64,C74, C42
.....3	003-1066	CAP,CER,MNLY,.1uF,50V,10% *NOTE*	30	C1,C5,C7,C8, C12,C18,C19, C29,C32,C34, C36,C45,C47, C48,C50,C58, C61,C65,C66, C78,C81,C67, C70,C86,C91, C92,C93,C94, C6,C98
.....3	003-2723	CAP,MONO CER,.0027uF,100V,5%	2	C11,C37
.....3	003-4723	CAP,MONO CER,.0047uF,100V,5%	2	C73,C96
.....3	003-4733	CAP,MONO CER,.047uF,50V,5%	1	C31
.....3	003-4743	CAP,CER MNLY,.47uF,50V,10%	9	C17,C35,C41, C68,C75,C76, C77,C79,C83
.....3	014-2293	CAP,LYTIC,2200UF,35V,STANDUP	2	C4,C20
.....3	020-2795-500	CAP,LYTIC,27000UF,50V,20%	1	C21
.....3	023-1075	CAP,LYTIC,10UF,50V NP STDUP	1	C62
.....3	023-1076	CAP,LYTIC,10uF,50V,STDUP	12	C9,C13,C14, C33,C39,C46, C49,C63,C80, C43,C85,C95
.....3	023-1084	CAP,LYTIC,100MFD,35V,STDUP,RAD	3	C16,C44,C82

©2011 Broadcast Electronics

BOM LEVEL	PART NO.	DESCRIPTION	QTY	REF. DES.
.....3	024-4783	CAP,LYTIC,470UF,50V,STDUP	1	C15
.....3	030-1033	CAP,CER MOLDED,.001UF,200V,10%	5	C3,C30,C56, C57,C71
.....3	030-1523	CAP,POLY,.15UF,600WVDC,10%	1	C22
.....3	030-2242	CAP, POLY, .02 uF, 600V	2	C100,C101
.....3	030-2256	CAP,POLY,2.2uF,400V	1	C52
.....3	033-4763	CAP,POLY FILM,.47UF,600V,OVAL	1	C23
.....3	040-1022	CAP,MICA,100PF,500V,RAD	4	C38,C40,C72, C69
.....3	100-1031	RES,100 OHM,1/4W,1%,METAL	5	R20,R46,R69, R82,R83
.....3	100-1041	RES,1K OHM,1/4W,1%	6	R27,R67,R68, R120,R121, R149
.....3	100-1051	RES,10K OHM,1/4W,1%	28	R3,R4,R10, R11,R12,R14, R18,R25,R31, R35,R54,R56, R62,R80,R91, R98,R111, R112,R113, R114,R115, R116,R117, R119,R124, R36,R151, R140
.....3	100-1083	RES,10MEG OHM,1/4W,5%	1	R156
.....3	100-1531	RES,150 OHM,1/4W,1%	2	R122,R147
.....3	100-1631	RES,162 OHM,1/4W,1%	1	R109
.....3	100-3373	RES,3.3MEG OHM,1/4W,5%	8	R19,R45,R53, R55,R64,R85, R87,R66
.....3	100-3951	RES,39.2K OHM,1/4W,1%	4	R74,R118, R75,R146
.....3	103-1007	RES,1 MEG OHM,1/4W,1%,METAL	2	R126,R148
.....3	103-1062	RES,100K OHM,1/4W,1%,METAL	14	R2,R15,R17, R60,R61,R93, R94,R97, R102,R103, R58,R89, R143,R152
.....3	103-1104	RES,1.10K OHM,1/4W,1%,METAL	4	R22,R23,R47, R76
.....3	103-1305	RES,13K OHM,1/4W,1%,METAL	1	R95
.....3	103-1331	RES,1.33K OHM,1/4W,1%,METAL	15	R1,R43,R57, R59,R63,R65, R77,R78,R79, R84,R86,R88, R127,R90, R28
.....3	103-1561	RES,150K OHM,1/4W,1%,METAL	1	R5
.....3	103-1915	RES,19.1K OHM,1/4W,1%,METAL	1	R6
.....3	103-2104	RES,2.10K OHM,1/4W,1%,METAL	1	R150
.....3	103-2241	RES,2.21K OHM,1/4W,1%,METAL	3	R44,R52,R16

©2011 Broadcast Electronics

BOM LEVEL	PART NO.	DESCRIPTION	QTY	REF. DES.
.....3	103-3324	RES,3.32K OHM,1/4W,1%,METAL	5	R9,R29,R30, R104,R96
.....3	103-3325	RES,33.2K OHM,1/4W,1%,METAL	1	R99
.....3	103-3485	RES,34.8K OHM,1/4W,1%,METAL	1	R73
.....3	103-4025	RES,40.2K OHM,1/4W,1%,METAL	1	R128
.....3	103-4324	RES,4.32K OHM,1/4W,1%,METAL	1	R13
.....3	103-4441	RES,4.42K OHM,1/4W,1%,METAL	1	R142
.....3	103-4753	RES,475 OHM,1/4W,1%,METAL	1	R108
.....3	103-4875	RES,48.7K OHM,1/4W,1%,METAL	1	R141
.....3	103-4996	RES,499K OHM,1/4W,1%,METAL	3	R8,R34,R155
.....3	103-5112	RES,51.1 OHM,1/4W,1%,METAL	3	R24,R32, R110
.....3	103-5141	RES,5.11K OHM,1/4W,1%,METAL	4	R26,R100, R101,R144
.....3	103-6653	RES,665 OHM,1/4W,1%,METAL	1	R33
.....3	103-7154	RES,7.15K OHM,1/4W,1%,METAL	1	R7
.....3	103-7874	RES,7.87K OHM,1/4W,1%,METAL	1	R92
.....3	103-8251	RES,82.5 OHM,1/4W,1%,METAL	1	R123
.....3	103-8663	RES,866 OHM,1/4W,1%,METAL	2	R70,R21
.....3	110-2733	RES,270 OHM,1/2W,5%	2	R39,R40
.....3	110-3933	RES,390 OHM,1/2W,5%	1	R81
.....3	110-6843	RES,6.8K OHM,1/2W,5%	1	R130
.....3	130-1010	RES,.1 OHM,10W,1%,WW	5	R105,R106, R107,R134, R135
.....3	130-1062	RES,100K OHM,2W,5%	1	R71
.....3	130-1225	RES,12 OHM,30W,20%	1	R72
.....3	130-4723	RES,47 OHM,2W,5%	4	R48,R49,R41, R42
.....3	130-8223	RES,82 OHM,2W,5%,CARBON	4	R37,R38, R137,R138
.....3	140-0030	THERMISTOR,100 OHMS,20%	1	RT1
.....3	140-0038	VARISTOR,V320LA20A GE	1	MOV2
.....3	140-0039	VARISTOR,V320LA40B	1	MOV1
.....3	200-4733	DIODE,ZENER,1N4733A, 5%	3	D5,D6,D26
.....3	200-4746	DIODE,ZENER,1N4746	1	D27
.....3	201-2800	DIODE,HOT CARRIER	3	D1,D4,D49
.....3	203-4005	DIODE,1N4005	9	D7,D8,D19, D23,D28,D30, D31,D40,D44
.....3	203-4148	DIODE,1N4148	11	D2,D3,D21, D22,D29,D37, D24,D39,D41, D42,D45
.....3	206-0250	TRANSZORB,250BV,1.5KE250CA	4	D50,D51,D52, D53
.....3	210-2222	TSTR,2N2222A	2	Q8,Q9
.....3	210-3906	2N3906 PNP 40V 2A .35W 250MHZ	3	Q3,Q4,Q6
.....3	210-4060	TSTR, IGBT (N)	2	Q21,Q22
.....3	210-6018	RF FET 150 mOHM 600V (N)	1	Q23

©2011 Broadcast Electronics

BOM LEVEL	PART NO.	DESCRIPTION	QTY	REF. DES.
.....3	210-7000	TSTR,2N7000,MOSFET	14	Q2,Q7,Q10, Q11,Q12,Q13, Q15,Q16,Q17, Q18,Q24,Q14, Q26,Q27
.....3	211-3904	TSTR,2N3904	4	Q1,Q5,Q19, Q20
.....3	212-0310	TSTR,FET N CHAN RF J3100	1	Q25
.....3	220-0311	IC,LT311 LINEAR	1	U7
.....3	220-4093	IC,MC14093B SCHMITT NAND	1	U21
.....3	220-4429	IC,DRIVER,MOSFET,TC4429CAT (N)	1	U19
.....3	220-6137	IC,OPTO-ISOLATOR,6N137	2	U17,U22
.....3	221-0074	AMP,OP,BIFET TLO74CW	1	U24
.....3	221-0393	IC,LM393N,VOLT COMPARATOR	2	U6,U23
.....3	225-0008	IC,CD4081BE	1	U12
.....3	227-0317	VR,LM317T,LM317KC	3	U3,U4,U16
.....3	228-3525	IC,SG3525AN,PWM CONTROL	1	U13
.....3	228-4538	IC,MC14538B NATL SEMICONDUCTOR	1	U5
.....3	229-0033	IC,OPTOIS,4N33	8	U1,U2,U8,U9, U10,U11,U14, U15
.....3	229-1750	TMP01FP TEMPERATURE SENSOR CHIP	1	U25
.....3	230-0013	RECT,FAST RECOVERY,FEN30JP	1	D32
.....3	230-0015	RECT,SILC,MR2406	2	D15,D17
.....3	230-0017	RECT,PWR SWITCHMOD MUR4100E	5	D16,D34,D46, D47,D48
.....3	237-2648	SCR, 40 AMP, 600 VOLT	2	D13,D14
.....3	239-0001	BRDG RECT,FULL WAVE 2 AMP,200V	3	D9,D12,D25
.....3	239-0003	BRDG RECT,6PH20 EDI	2	D11,D10
.....3	334-0030-001	FUSE,30A,125V,1/4x1-1/4 AXIAL LEAD	2	F1,F2
.....3	340-0004	SW,JUMPER PROGRAMMABLE	3	P4,P5,P8
.....3	409-0121	PAD,TSTR MTG,TO18 CASE	2	Q8,Q9
.....3	413-0106	TERM,TEST POINT,OVAL,RED	13	TP1,TP2,TP3, TP4,TP5,TP6, TP7,TP8,TP9, TP10,TP11, TP12,TP14
.....3	417-0080-001	HEADER,8 POS R.ANGLE	0.375	J4
.....3	417-0376-001	CONN, MALE, PCB MT	1	J1
.....3	417-0600	SKT,IC 6 PIN	8	XU1,XU2,XU8 XU9,XU10, XU11,XU14, XU15
.....3	417-0804	SOCKET,8-PIN DIP,BURNDY	6	XU6,XU7, XU17,XU22, XU23,XU25
.....3	417-1276	CONN,PCB,12 PIN	1	J2
.....3	417-1404	SOCKET,14-PIN DIP	3	XU12,XU21, XU24

©2011 Broadcast Electronics

BOM LEVEL	PART NO.	DESCRIPTION	QTY	REF. DES.
.....3	417-1604	SKT,16-PIN,DIP	2	XU5,XU13
.....3	417-2401	CONN,PCB,MR,MALE,24-PIN,AMP	1	J3
.....3	417-4004	CONN,HEADER,2 PIN	4	J5,J6,J7,J8
.....3	420-4106	SCREW,4-40X.375,S.S. PH	4	
.....3	420-4108	SCREW,4-40X.500,S.S. PH	3	
.....3	420-6104	SCREW,6-32X.250,S.S. PH	9	
.....3	423-4001	#4 FLAT SS .250 X .125 X .018	7	
.....3	423-4002	#4 LOCK S.S. SPLIT	7	
.....3	423-6001	#6 FLAT .250 X .150 X .015	3	
.....3	423-6002	#6 LOCK SPLIT	18	
.....3	441-0012	STOFF,#6-32 MALE-FEMALE 1/4	9	
.....3	455-0071	HEATSINK,CLIP-ON,PCB MT,TO-220	1	
.....3	455-8000-001	HEATSINK,2 INCH,A" VERSION AM"	2	
.....3	455-8001-001	HEATSINK,4 INCH,A" VERSION AM"	1	
.....3	517-0315-001	PCB MACH,POWER SUPPLY,AM-1A	1	
.....3	611-5000	TUB,HT SHK 1/2	0.1	
.....3	690-0221	TUB,BLK HEAT SHRINK 3/4	0.125	
.....3	693-0180	TUB,TEFLON,THINWALL,AWG18,NTL	0.25	
.....3	700-0028	COMPOUND,THERM JT,TYPE 120	0.001	
....2	917-0315-003	ASSY PCB,PS BULK CAPACITOR,AM-500A	1	
.....3	013-1500	CAP,LYTIC,1500uF,450VDC	2	C24,C25
.....3	033-4763	CAP,POLY FILM,.47UF,600V,OVAL	1	C28
.....3	110-4763	RES,470K OHM,1/2W,5%	1	R129
.....3	130-1062	RES,100K OHM,2W,5%	1	R50
.....3	130-3623	RES,36 OHM,2W,5%	1	R51
.....3	420-0705	SCREW,10-32X.312,BR PH PA	4	
.....3	423-0007	#10 LOCK INT TOOTH	4	
.....3	426-8007	STUD,PEM,KFH-832-8ET,PCB MOUNT	6	E5,E6,E7,E8, E10,E11
.....3	517-0315-002	PCB MACH,PS BULK CAPACITOR,AM-1A	1	
.....3	611-0060	TUB, HT SHK, 1/16	0.25	
....2	917-0315-005	ASSY PCB,PS CAPACITOR,AM-500A	1	
.....3	014-7200	CAP,LYTIC,7200UF,200WVDC	2	C89,C88
.....3	140-0006	VARISTOR,V130LA10A,GE	1	MOV3
.....3	420-0705	SCREW,10-32X.312,BR PH PA	4	
.....3	423-0007	#10 LOCK INT TOOTH	4	
.....3	426-8007	STUD,PEM,KFH-832-8ET,PCB MOUNT	3	
.....3	517-0315-004	PCB MACH,PS CAPACITOR,AM-1A	1	
....2	917-0321-001	ASSY PCB,COMBINER,AM-1A	1	
.....3	360-0107	ASSY,RF CHOKE AM-1A	2	L1,L2
.....4	402-0000	TY-RAP	3	
.....4	601-1220	WIRE,AWG12,19/25,TFE INS,BLU	5.833	
.....3	370-0055	ASSY,AM-1A COMBINER XFMR	2	T1,T2
.....4	375-0007-100	CORE, RF TRANSFORMER	2	
.....4	402-0066	NYLON CABLE TIE, 11-1/2 (292mm)"	1	
.....4	600-1248	WIRE,LITZ,1248/48,D.,NY,NYLEZE(NOTE	4.333	

©2011 Broadcast Electronics

BOM LEVEL	PART NO.	DESCRIPTION	QTY	REF. DES.
.....4	601-1220	WIRE,AWG12,19/25,TFE INS,BLU	1.417	
.....4	601-1221	WIRE,AWG12,19/25,TFE INS,WHT	1.417	
.....4	693-0090	TUB,TEFLON,STANDARD,AWG9,NT L	4.333	
.....3	402-0001	TY-RAP,T+B TY24M,1-1/4 DIA	2	
.....3	402-0015	TIE,CBL,PANDUIT, 7 3/8 LONG"	8	
.....3	413-0106	TERM,TEST POINT,OVAL,RED	5	TP1,TP2,TP3, TP4,TP5
.....3	426-8007	STUD,PEM,KFH-832-8ET,PCB MOUNT	3	E1,E3,E4
.....3	517-0321-001	PCB MACH,COMBINER,AM-1A	1	
.....4	517-0321	PCB,MACH,COMBINER,AM-1A	1	
....2	919-0096-001	ASSY PCB,OPTICALLY COUPLED REL NOTE	1	
.....3	919-0096	ASSY PCB,OPTICALLY COUPLED REL (SBCM)	1	
.....4	000-1051	CAP,CER,DISC,.03UF,300VAC,20%	1	C3
.....4	002-1034	CAP,CER,DISC,.001UF,1000V	2	C1,C4
.....4	020-4773	CAP,LYTIC,47UF,35V,STDUP	1	C2
.....4	103-5112	RES,51.1 OHM,1/4W,1%,METAL	1	R4
.....4	110-5633	RES,560 OHM,1/2W,5%	1	R2
.....4	110-8233	RES,820 OHM,1/2W,5%	1	R3
.....4	130-2032	RES,2K OHM,10W,3%,WW	2	R1,R5
.....4	140-0023	VARISTOR,27V,V27ZA60	1	MOV1
.....4	200-5359	DIODE,ZENER,1N5359 24V 5W	1	D2
.....4	203-4005	DIODE,1N4005	2	D1,D4
.....4	229-0033	IC,OPTOIS,4N33	1	U1
.....4	239-0003	BRDG RECT,6PH20 EDI	1	D5
.....4	270-0054	REL,PC 24V T90NID1224 P&B	1	K1
.....4	270-0054-001	COVER,DUST REL 35C620 P&B	1	
.....4	330-0055	FUSE,3A,250V,PCB MOUNT	2	F1,F2
.....4	410-0025	TERM,MALE DISCONNECT PC .25TAB	5	E1,E2,E3,E4, E5
.....4	417-0600	SKT,IC 6 PIN	1	XU1
.....4	420-2504	SCREW,2-56X.250,S.S. PH FH SC	4	
.....4	420-4104	SCREW,4-40X.250,S.S. PH	2	
.....4	421-2001	2-56 S.S. NUT	4	
.....4	423-2002	#2 LOCK SPLIT	4	
.....4	423-4002	#4 LOCK S.S. SPLIT	2	
.....4	474-0347	PLATE,SOLID STATE RELAY MOUNT	1	
.....4	519-0096	PCB,MACH,OPTICALLY COUPLED RELAY	1	
.....4	601-2209	WIRE,AWG22,19/34 WHT	0.75	
....2	947-0179	WIRE HARNESS,AM-1A (SBCM)	1	
.....3	400-2170	GROMMET,FOR 3/8	2	
.....3	410-0015	LUG,TERM #8 RING CRIMP 12-10	34	
.....3	410-0050	LUG,TERM,10-12GA,FEMSPADE	5	
.....3	410-0060	LUG,TERM,#10 RING CRIMP 10-12G	12	
.....3	410-1421	LUG,QUICK DISCONNECT #18-22	6	
.....3	410-1488	LUG,TERM #6 SPADE #10-12	6	

©2011 Broadcast Electronics

BOM LEVEL	PART NO.	DESCRIPTION	QTY	REF. DES.
.....3	410-1489	LUG,TERM #6 SPADE #16-22	3	
.....3	410-1553	LUG,TERM #10 RING CRIMP 16-22	2	
.....3	410-7105	LUG,TERM 1/4	1	
.....3	417-0053	SKT,CONN 641294-1 AMP	43	
.....3	417-0138	HSNG,MOD IV 4 POS 87499-7 AMP	2	
.....3	417-0142	PIN,.050 DIA 26-22 745254-3	41	
.....3	417-0251	PLUG,25 PIN 207464-1 AMP	2	
.....3	417-0372-001	CONTACT, CONN	9	
.....3	417-0377	CONN,FEM,PLB16F0000,POSITRONIC	1	
.....3	417-0499	CONN HSNG,2POS 87499-3 AMP	1	
.....3	417-1401	HOUSING,SKT,14PIN,AMP MOD IV	1	
.....3	417-2402	HSNG,WIRE,MR,FEMALE,24-PIN,AMP	2	
.....3	417-2510	KIT,BACKSHELL FOR 25PIN D CONN	2	
.....3	417-8766	CONTACT,CRIMP,MOD-IV 87809-1	19	
.....3	418-0240	PLUG,FEM,4PIN	1	
.....3	418-0670	HOUSING,CONN,6PIN FEM	1	
.....3	418-0701	CONN,HOUSING,2 PIN	3	
.....3	601-0110	WIRE,AWG 10 65/28 BLK	5.85	
.....3	601-1202	WIRE,AWG12 19/25 RED	64	
.....3	601-1220	WIRE,AWG12,19/25,TFE INS,BLU	0.8	
.....3	601-1800	WIRE,AWG18 19/30 BLK	15	
.....3	601-2209	WIRE,AWG22,19/34 WHT	23.5	
.....3	608-0002	CBL,8 COND,SH,AWG 24,7/32	10.5	
.....3	610-8723	CBL,SH 4 COND #22 ST 8723 BELD	21.5	
.....3	611-1875	TUB,HT SHK,3/16	2.5	
.....3	621-1359	CBL,COAX,RG316/U,50 OHM	22	
.....3	622-8451	WIRE,BELD 8451,SHIELD,1PR	13.1	
.....3	682-0001	CORD LINE,3 COND,DETACH 7.5FT	1	
.....3	693-0002	SLVG,1/4 EXPANDO FR BLACK"	4	
.....3	693-0003	SLVG,1/2	5.3	
....2	947-0209	CABLE FAN KIT, AM XMTR (SBCM)	1	
.....3	417-0036	PIN CONN,AMP,350967-1	2	
.....3	417-8500	PLUG AND CORD ET,AM500 FAN	1	
.....3	418-0702	HSNG,PIN 2 PIN 1-640507 AMP	1	
..1	957-0064	ASSY,OUTPUT NETWORK, AM-1A	1	
....2	140-0021	VARISTOR BLOCK, 275VRMS, 350VDC	3	
....2	330-0201	FUSE,MDA 2A 250V SLO-BLO	2	F1,F2
....2	339-0024	RFI FILTER,30VB6	1	
....2	341-0063	CKT BRKR,20A 2POLE 250VAC	1	
....2	370-2363	CHOKE, 3.6MHY, AM XMTR	1	
....2	370-2364	CHOKE,1.04MHY,AM XMTR	1	
....2	376-0047-101	XFMR ASSEMBLY, AM POWER SUPPLY	1	
.....3	376-0047-001	XMFR,AM XMTR POWER SUPPLY	1	
.....3	402-0000	TY-RAP	4	
.....3	417-0036	PIN CONN,AMP,350967-1	2	
.....3	417-0053	SKT,CONN 641294-1 AMP	10	

©2011 Broadcast Electronics

BOM LEVEL	PART NO.	DESCRIPTION	QTY	REF. DES.
.....3	418-0702	HSNG,PIN 2 PIN 1-640507 AMP	1	
.....3	418-1271	CONN,HOUSING,12PIN	1	
....2	380-9001	FAN,PATRIOT,230 VAC	1	
....2	400-0055	ISOLATOR,ADH BACKED,.063 X .75	16	
....2	400-6700	GROMMET STRIP,.062-.090	2.15	
....2	402-0000	TY-RAP	6	
....2	402-0008	MTG DEVICE,FOR #6SCR,TIE CBL	8	
....2	402-0053	WIRE TIE,2 1/8	2	
....2	407-0173	FILTER,AIR,FXA 7.50x7.50"x.86""	1	
....2	409-0026	CARD GUIDE,6	12	
....2	410-1412	LUG,SOLD #4 5/8	1	
....2	412-0090	BARR STP,9 POS 7/16	1	
....2	415-2012	FUSEHOLDER,PANEL MOUNT, 10A	2	
....2	417-0203	CONN,BNC FLANGED PNL MT UG-290	1	
....2	417-0204	RECP,UG/58 TYPE	1	
....2	418-0320-100	CONN,2POLE 3WIRE,20A,250V,MALE	1	
....2	420-0000	SCREW,W/CAPT WASH 10-32X1/2BLK (NOTE	3	
....2	420-0108	SCREW,10-32X.500,S.S. PHH	14	
....2	420-0110	SCREW,10-32X.625,S.S. PHH	2	
....2	420-0496	SCREW,10-32X.375,BLACK SHSS	1	
....2	420-0500	SCREW,10-32X.375,BR PH	6	
....2	420-0600	SCREW,3-56x.312,PHL, SS	3	
....2	420-0705	SCREW,10-32X.312,BR PH PA	9	
....2	420-4012	SCREW,3-56X.500,BR PH PAN HD	1	
....2	420-4106	SCREW,4-40X.375,S.S. PH	4	
....2	420-6124	SCREW,6-32X1.500,S.S. PH	8	
....2	420-6130	SCREW,6-32X.375,NYLON SL PAN HD	1	
....2	420-6203	SCREW,6-32X.3125,PH PAN HD SC	4	
....2	420-6506	SCREW,6-32X.375,S.S. PH FH	6	
....2	420-8106	SCREW,8-32X.375,S.S. PHH	4	
....2	420-8111	SCREW,8-32X.500,BR PH	2	
....2	420-8121	SCREW,8-32X.375,BR PH	2	
....2	421-0005	10-32 S.S. ELASTIC STOP NUT	8	
....2	421-0102	10-32 KEP NUT	18	
....2	421-0801	#10-32 BR HEX NUT	10	
....2	421-1003	1/4-20 HEX NUT	2	
....2	421-1113	RIV,CLOSED-END .125 X .316L	12	
....2	421-3002	3-56 BR HEX NUT	1	
....2	421-4008	4-40 KEP NUT	8	
....2	421-6008	6-32 KEP NUT	7	
....2	421-6908	SHEET EDGE CONNECTOR 6-32	41	
....2	421-8002	8-32 HEX NUT, BRASS	23	
....2	421-8003	8-32 KEP NUT	1	
....2	422-6106	SCREW,SEMS 6-32 X 3/8 PAN PH. ST."	26	
....2	422-6107	SCREW,SEMS 6-32 X 7/16 PAN PH.ST."	65	

©2011 Broadcast Electronics

BOM LEVEL	PART NO.	DESCRIPTION	QTY	REF. DES.
....2	422-8108	SCREW, SEMS, 8-32 X 1/2, PAN HEAD"	1	
....2	423-0002	#10 LOCK SPLIT	2	
....2	423-0005	#10 LOCK SPLIT (BRONZE)	20	
....2	423-0006	#10 FLAT .44 X .20 X .034	5	
....2	423-0007	#10 LOCK INT TOOTH	6	
....2	423-0008	1/4 FLAT .565 X .260 X .040	8	
....2	423-1003	1/4-20 LOCK SPLIT	2	
....2	423-3010	#3 SPLIT LOCK (BRONZE)	4	
....2	423-6002	#6 LOCK SPLIT	23	
....2	423-6006	#6 FLAT, 0.75 O.D, 0.140 I.D., 0.062 THK, SST	2	
....2	423-6011	#6 FLAT .310 X .160 X .030	6	
....2	423-6015	#6 FLAT .320 X .145 X	1	
....2	423-8005	#8 LOCK SPLIT	20	
....2	423-8006	#8 LOCK INT TOOTH	26	
....2	441-2114	STOFF,ALUM 1/4HEX X 1 6-32	3	
....2	441-8153	SPR,.25 HEX X .31LG,6-32 THD	2	
....2	441-8217	STOFF,ALUM 1/4HEX X 5/8 6-32	6	
....2	441-8292	STOFF,BRASS MALE-FEM 1/4HX1.75	4	
....2	441-8452	STOFF,8-32FF,2.5L,.25 HEX ALUM	2	
....2	450-1701	PLUG,HOLE,7/8	1	
....2	459-0189	BALL,SPARK GAP	2	
....2	459-0191	BLOCK,SPARK GAP	1	
....2	459-0192	THREADED SHAFT,SPARK GAP	1	
....2	463-0116	STRAP,MOV CHASSIS GND	1	
....2	469-0366-1	STRIP,RFI SHIELD 1.25	2	
.....3	469-0366	FINGER STOCK (NOTE!!!!!)	1.25	
....2	471-0866	PANEL,BREAKAWAY,1 PER AM XMTR	1	
....2	471-2009	GUARD,EDGE CARD CONN,PWR BLK AM500	1	
....2	471-2010	GUARD,FLAT,POWER BLOCK, AM500	1	
....2	471-5050	PANEL,FRONT,AM-1A	1	
.....3	471-5050-009	PANEL,FRONT,AM-1A(UNSCREENED)	1	
....2	471-5051	PANEL,REAR,AM-1A	1	
....2	471-5052	CHASSIS,AM-1A	1	
....2	471-5053	PANEL,LEFT SIDE,AM-1A	1	
....2	471-5054	COVER,TOP,AM-1A	1	
....2	471-5055	ENCLOSURE,AM-1A	1	
....2	471-5056	PARTITION,AM-1A	1	
.....3	471-5056-009	PARTITION,AM1A (UNSCREENED)	1	
....2	471-5057	TOP,POWER BLOCK,AM-1A	1	
....2	471-5058	BOTTOM,POWER BLOCK,AM-1A	1	
....2	471-5060	AIR DAM,AM-1A	1	
....2	471-5062	PLATE,CAPACITOR MOUNTING, AM-1A	1	
....2	471-5063	STRAP,LIGHTNING PROTECTION PCB,AM-1	1	

©2011 Broadcast Electronics

BOM LEVEL	PART NO.	DESCRIPTION	QTY	REF. DES.
....2	471-5494	SUPPORT,SPARK GAP	1	
....2	500-211	Screw,SEMS 4-40x3/8 Ph Pan Head MS Black Zinc (External)	2	
....2	592-0179	PLATE,DANGER,AM XMTRS	1	
.....3	592-0004-009	WARNING PLATE,UNSCREENED	1	
....2	594-0019	LABEL,DANGER HV 1X 1.5	1	
....2	594-0073	LABEL,WARNING ROTATING FANS	1	
....2	594-0500	LABEL,DANGER	1	
....2	917-0303-001	ASSY PCB,PWR BLOCK MTHRBD,AM-1A	1	
.....3	003-1066	CAP,CER,MNLY,.1uF,50V,10% *NOTE*	1	C2
.....3	030-2256	CAP,POLY,2.2uF,400V	1	C4
.....3	370-0037	XMFR,P.A. DRIVE,AM-1/5	1	T1
.....4	375-0008	CORE,RF DRIVE TRANSFORMER	1	
.....4	555-0035	COST,LABOR 370-0037	1	
.....4	601-2411	WIRE,AWG 24, TFE, 250V, ORANGE	2	
.....4	601-2412	WIRE, AWG 24, TFE, 250V, BLUE	2	
.....4	601-2419	WIRE,AWG24,TFE,250V,WHT	2	
.....3	417-0300	SOCKET,CARD EDGE,AMP 531353-6	3	J1D,J1E,J1F
.....3	417-0375	CONN,15 PIN SUB-D,FEMALE	3	J2D,J2E,J2F
.....3	417-2401	CONN,PCB,MR,MALE,24-PIN,AMP	1	J3
.....3	426-8007	STUD,PEM,KFH-832-8ET,PCB MOUNT	7	E11,E12,E13, E14,E15,E16, E23
.....3	517-0303-001	PCB MACH,PWR BLOCK MTHRBD,AM-1A	1	
.....4	517-0303	PCB MACH,PWR BLOCK MTHRBD	1	
.....3	601-0022	WIRE,AWG22,BUSS	0.6	
....2	917-0306-002	ASSY PCB,DIRECTIONAL COUPLER,AM,A/E SERIES	1	
.....3	003-1066	CAP,CER,MNLY,.1uF,50V,10% *NOTE*	16	C202,C203, C204,C205, C206,C207, C208,C209, C210,C211, C212,C213, C214,C215, C216,C217
.....3	030-1043	CAP,CER MOLDED,.01uF,200V,RAD	1	C201
.....3	031-2033	CAP,MYLAR FILM,.0022uF,100V,10%	2	C219,C220
.....3	042-5021	CAP,MICA,500PF,500V,1%	1	C218
.....3	103-1021	RES,10 OHM,1/4W,1%,METAL	4	R226,R227, R228,R229
.....3	103-3011	RES,30.1 OHM,1/4W,1%,METAL	6	R206,R210, R211,R212, R213,R214
.....3	120-1531	RES,150 OHM,1W,1%,(MIL 1/2W)	4	R230,R231, R232,R233
.....3	120-2031	RES,200 OHM,1W,1%,MIL 1/2W	12	R215,R216, R217,R218, R219,R220, R221,R222,

©2011 Broadcast Electronics

BOM LEVEL	PART NO.	DESCRIPTION	QTY	REF. DES.
				R236,R237, R238,R239
.....3	130-1821	RES,18 OHM,3W,1%	3	R207,R208, R209
.....3	178-2056	RES,TRMR,20K,1W,HORZ,22 TURN	4	R223,R224, R234,R235
.....3	192-2533	POT,250 OHM,2W,DOUBLE,1-TURN	5	R201,R202, R203,R204, R205
.....3	200-0024	DIODE,ZENER,24V,1W,5%,1N4749A	4	D209,D210, D213,D214
.....3	201-2800	DIODE,HOT CARRIER	4	D201,D202, D203,D204
.....3	203-4148	DIODE,1N4148	8	D205,D206, D207,D208, D211,D212, D215,D216
.....3	270-0062	REL,SPST 5VDC 500 OHM,REED	5	K201,K202, K203,K204, K205
.....3	340-0002	SW,4 POS,SPST,8-PIN DIP	1	S201
.....3	340-0004	SW,JUMPER PROGRAMMABLE	6	P203,P204A, P204B.P205A, P205B,P206
.....3	360-0093	COIL,MOLDED,SHIELDED,56UH	1	L202
.....3	364-0056	COIL,MOLDED,SHIELDED 5.6UH	1	L201
.....3	364-0670	CHOKE,10MHY	2	L203,L204
.....3	370-0040	XFMR,CURRENT,AM-1/5 (SBCM)	2	R201,T202
.....4	375-0009	CORE,1.102 ODX.63 IDX.512 THK	1	
.....4	555-0040	COST,LABOR 370-0040	1	
.....4	640-2600	WIRE,AWG 26,MAGNET,RED	0.005	
.....4	640-2600-1	WIRE,AWG 26,MAGNET,GRN	0.006	
.....4	700-0003	TAPE,ELECTRICAL,YEL,3/8	0.01	
.....3	370-0041	XFMR,VOLTAGE,AM-1/5	1	T203
.....4	375-0007-100	CORE, RF TRANSFORMER	1	
.....4	555-0041	COST,LABOR 370-0041	1	
.....4	601-2410	WIRE,AWG24,TFE,250V,BLK	8	
.....4	601-2411	WIRE,AWG 24, TFE, 250V, ORANGE	1	
.....4	601-2412	WIRE, AWG 24, TFE, 250V, BLUE	0.5	
.....4	601-2419	WIRE,AWG24,TFE,250V,WHT	10	
.....4	700-0103	TAPE,KAPTON 1/2" 0.010 "		
.....3	402-0001	TY-RAP,T+B TY24M,1-1/4 DIA	6	
.....3	410-0025	TERM,MALE DISCONNECT PC .25TAB	3	E209,E210, E211
.....3	413-0025	TERM,TURRET,2 SHLDR,.360,GOLD FLASH	17	E202,E203, E204,E205, E206,E207, E208,E212, E213,E214, E215,E216, E217,E219, E220,E221

©2011 Broadcast Electronics

BOM LEVEL	PART NO.	DESCRIPTION	QTY	REF. DES.
.....3	417-0080-001	HEADER,8 POS R.ANGLE	1	J202,J203
.....3	417-0200	CONN,HEADER 20 PIN	2	J201,J204, J205,J206
.....3	517-0306-002	PCB MACH,DIRECTIONAL COUPLER,(scan)	1	
.....4	517-0306	PCB MACH,ECU BREAKAWAY,AM-1A	0.312	
.....3	693-0220	TUB,TEFLON,TW,AWG22 NTL	0.5	
....2	917-0306-007	ASSY PCB,AC SAMPLE,AM,A/E SERIES	1	
.....3	033-4763	CAP,POLY FILM,.47UF,600V,OVAL	1	C701
.....3	100-3373	RES,3.3MEG OHM,1/4W,5%	1	R707
.....3	103-1561	RES,150K OHM,1/4W,1%,METAL	6	R701,R702, R703,R704, R705,R706
.....3	203-4005	DIODE,1N4005	4	D701,D702, D703,D704
.....3	410-0025	TERM,MALE DISCONNECT PC .25TAB	2	E701,E702
.....3	417-0700	CONN,PCB MT,2PIN	1	J701
.....3	517-0306-007	PCB MACH,AC SAMPLE,AM-1A	1	
.....4	517-0306	PCB MACH,ECU BREAKAWAY,AM-1A	0.022	
.....3	611-0060	TUB, HT SHK, 1/16	1.5	
....2	917-0306-009	ASSY PCB,TEMPERATURE SENSOR,AM,A/E SERIES	1	
.....3	002-1034	CAP,CER,DISC,.001UF,1000V	1	C907
.....3	003-1066	CAP,CER,MNLY,.1uF,50V,10% *NOTE*	2	C902,C906
.....3	100-1051	RES,10K OHM,1/4W,1%	2	R901,R903
.....3	103-2241	RES,2.21K OHM,1/4W,1%,METAL	1	R902
.....3	220-0035	IC,LM35DZ CELSIUS TEMP SENSOR	1	U901
.....3	413-1597	TERM,TURRET,2 SHLDR,.219,GOLD FLASH	2	TP901,TP902
.....3	418-0255	CONN,MALE,4PIN	1	J901
.....3	517-0306-009	PCB MACH,TEMPERATURE SENSOR,AM-1A	1	
.....4	517-0306	PCB MACH,ECU BREAKAWAY,AM-1A	0.015	
....2	917-0306-014	ASSY,PCB,LIGHTNING DET,AM1A	1	
.....3	042-3913	CAP,MICA,1000PF,500V	20	C401,C402, C403,C404, C405,C406, C407,C408, C409,C410, C411,C412, C413,C414, C415,C416, C417,C418, C419,C420
.....3	215-0001	PHOTOTRANSISTOR,1.8MA IC AT 5V	1	Q401
.....3	340-0004	SW,JUMPER PROGRAMMABLE	3	P403,P404, P405

©2011 Broadcast Electronics

BOM LEVEL	PART NO.	DESCRIPTION	QTY	REF. DES.
.....3	410-0025	TERM,MALE DISCONNECT PC .25TAB	3	E201,E202, E203
.....3	417-0200	CONN,HEADER 20 PIN	0.2	402
.....3	417-4004	CONN,HEADER,2 PIN	4	J403,J404, J405,J401
.....3	517-0306-004	PCB MACH,LIGHTNING DETECTOR,AM-1A	1	
.....4	517-0306	PCB MACH,ECU BREAKAWAY,AM-1A	0.067	
....2	917-0315-001	ASSY PCB,POWER SUPPLY,AM XMTRS (SBCM) (NOTE)	1	
.....3	003-1013	CAP,MONO CER,.01uF,100V,5%	7	C2,C10,C59, C60,C64,C74, C42
.....3	003-1066	CAP,CER,MNLY,.1uF,50V,10% *NOTE*	30	C1,C5,C7,C8, C12,C18,C19, C29,C32,C34, C36,C45,C47, C48,C50,C58, C61,C65,C66, C78,C81,C67, C70,C86,C91, C92,C93,C94, C6,C98
.....3	003-2723	CAP,MONO CER,.0027uF,100V,5%	2	C11,C37
.....3	003-4723	CAP,MONO CER,.0047uF,100V,5%	2	C73,C96
.....3	003-4733	CAP,MONO CER,.047uF,50V,5%	1	C31
.....3	003-4743	CAP,CER MNLY,.47uF,50V,10%	9	C17,C35,C41, C68,C75,C76, C77,C79,C83
.....3	014-2293	CAP,LYTIC,2200UF,35V,STANDUP	2	C4,C20
.....3	020-2795-500	CAP,LYTIC,27000UF,50V,20%	1	C21
.....3	023-1075	CAP,LYTIC,10UF,50V NP STDUP	1	C62
.....3	023-1076	CAP,LYTIC,10uF,50V,STDUP	12	C9,C13,C14, C33,C39,C46, C49,C63,C80, C43,C85,C95
.....3	023-1084	CAP,LYTIC,100MFD,35V,STDUP,RAD	3	C16,C44,C82
.....3	024-4783	CAP,LYTIC,470UF,50V,STDUP	1	C15
.....3	030-1033	CAP,CER MOLDED,.001UF,200V,10%	5	C3,C30,C56, C57,C71
.....3	030-1523	CAP,POLY,.15UF,600WVDC,10%	1	C22
.....3	030-2242	CAP, POLY, .02 uF, 600V	2	C100,C101
.....3	030-2256	CAP,POLY,2.2uF,400V	1	C52
.....3	033-4763	CAP,POLY FILM,.47UF,600V,OVAL	1	C23
.....3	040-1022	CAP,MICA,100PF,500V,RAD	4	C38,C40,C72, C69
.....3	100-1031	RES,100 OHM,1/4W,1%,METAL	5	R20,R46,R69, R82,R83
.....3	100-1041	RES,1K OHM,1/4W,1%	6	R27,R67,R68, R120,R121, R149

©2011 Broadcast Electronics

BOM LEVEL	PART NO.	DESCRIPTION	QTY	REF. DES.
.....3	100-1051	RES,10K OHM,1/4W,1%	28	R3,R4,R10, R11,R12,R14, R18,R25,R31, R35,R54,R56, R62,R80,R91, R98,R111, R112,R113, R114,R115, R116,R117, R119,R124, R36,R151, R140
.....3	100-1083	RES,10MEG OHM,1/4W,5%	1	R156
.....3	100-1531	RES,150 OHM,1/4W,1%	2	R122,R147
.....3	100-1631	RES,162 OHM,1/4W,1%	1	R109
.....3	100-3373	RES,3.3MEG OHM,1/4W,5%	8	R19,R45,R53, R55,R64,R85, R87,R66
.....3	100-3951	RES,39.2K OHM,1/4W,1%	4	R74,R118, R75,R146
.....3	103-1007	RES,1 MEG OHM,1/4W,1%,METAL	2	R126,R148
.....3	103-1062	RES,100K OHM,1/4W,1%,METAL	14	R2,R15,R17, R60,R61,R93, R94,R97, R102,R103, R58,R89, R143,R152
.....3	103-1104	RES,1.10K OHM,1/4W,1%,METAL	4	R22,R23,R47, R76
.....3	103-1305	RES,13K OHM,1/4W,1%,METAL	1	R95
.....3	103-1331	RES,1.33K OHM,1/4W,1%,METAL	15	R1,R43,R57, R59,R63,R65, R77,R78,R79, R84,R86,R88, R127,R90, R28
.....3	103-1561	RES,150K OHM,1/4W,1%,METAL	1	R5
.....3	103-1915	RES,19.1K OHM,1/4W,1%,METAL	1	R6
.....3	103-2104	RES,2.10K OHM,1/4W,1%,METAL	1	R150
.....3	103-2241	RES,2.21K OHM,1/4W,1%,METAL	3	R44,R52,R16
.....3	103-3324	RES,3.32K OHM,1/4W,1%,METAL	5	R9,R29,R30, R104,R96
.....3	103-3325	RES,33.2K OHM,1/4W,1%,METAL	1	R99
.....3	103-3485	RES,34.8K OHM,1/4W,1%,METAL	1	R73
.....3	103-4025	RES,40.2K OHM,1/4W,1%,METAL	1	R128
.....3	103-4324	RES,4.32K OHM,1/4W,1%,METAL	1	R13
.....3	103-4441	RES,4.42K OHM,1/4W,1%,METAL	1	R142
.....3	103-4753	RES,475 OHM,1/4W,1%,METAL	1	R108
.....3	103-4875	RES,48.7K OHM,1/4W,1%,METAL	1	R141
.....3	103-4996	RES,499K OHM,1/4W,1%,METAL	3	R8,R34,R155
.....3	103-5112	RES,51.1 OHM,1/4W,1%,METAL	3	R24,R32, R110
.....3	103-5141	RES,5.11K OHM,1/4W,1%,METAL	4	R26,R100, R101,R144

©2011 Broadcast Electronics

BOM LEVEL	PART NO.	DESCRIPTION	QTY	REF. DES.
.....3	103-6653	RES,665 OHM,1/4W,1%,METAL	1	R33
.....3	103-7154	RES,7.15K OHM,1/4W,1%,METAL	1	R7
.....3	103-7874	RES,7.87K OHM,1/4W,1%,METAL	1	R92
.....3	103-8251	RES,82.5 OHM,1/4W,1%,METAL	1	R123
.....3	103-8663	RES,866 OHM,1/4W,1%,METAL	2	R70,R21
.....3	110-2733	RES,270 OHM,1/2W,5%	2	R39,R40
.....3	110-3933	RES,390 OHM,1/2W,5%	1	R81
.....3	110-6843	RES,6.8K OHM,1/2W,5%	1	R130
.....3	130-1010	RES,.1 OHM,10W,1%,WW	5	R105,R106, R107,R134, R135
.....3	130-1062	RES,100K OHM,2W,5%	1	R71
.....3	130-1225	RES,12 OHM,30W,20%	1	R72
.....3	130-4723	RES,47 OHM,2W,5%	4	R48,R49,R41, R42
.....3	130-8223	RES,82 OHM,2W,5%,CARBON	4	R37,R38, R137,R138
.....3	140-0030	THERMISTOR,100 OHMS,20%	1	RT1
.....3	140-0038	VARISTOR,V320LA20A GE	1	MOV2
.....3	140-0039	VARISTOR,V320LA40B	1	MOV1
.....3	200-4733	DIODE,ZENER,1N4733A, 5%	3	D5,D6,D26
.....3	200-4746	DIODE,ZENER,1N4746	1	D27
.....3	201-2800	DIODE,HOT CARRIER	3	D1,D4,D49
.....3	203-4005	DIODE,1N4005	9	D7,D8,D19, D23,D28,D30, D31,D40,D44
.....3	203-4148	DIODE,1N4148	11	D2,D3,D21, D22,D29,D37, D24,D39,D41, D42,D45
.....3	206-0250	TRANSZORB,250BV,1.5KE250CA	4	D50,D51,D52, D53
.....3	210-2222	TSTR,2N2222A	2	Q8,Q9
.....3	210-3906	2N3906 PNP 40V 2A .35W 250MHZ	3	Q3,Q4,Q6
.....3	210-4060	TSTR, IGBT (N)	2	Q21,Q22
.....3	210-6018	RF FET 150 mOHM 600V (N)	1	Q23
.....3	210-7000	TSTR,2N7000,MOSFET	14	Q2,Q7,Q10, Q11,Q12,Q13, Q15,Q16,Q17, Q18,Q24,Q14, Q26,Q27
.....3	211-3904	TSTR,2N3904	4	Q1,Q5,Q19, Q20
.....3	212-0310	TSTR,FET N CHAN RF J3100	1	Q25
.....3	220-0311	IC,LT311 LINEAR	1	U7
.....3	220-4093	IC,MC14093B SCHMITT NAND	1	U21
.....3	220-4429	IC,DRIVER,MOSFET,TC4429CAT (N)	1	U19
.....3	220-6137	IC,OPTO-ISOLATOR,6N137	2	U17,U22
.....3	221-0074	AMP,OP,BIFET TLO74CW	1	U24
.....3	221-0393	IC,LM393N,VOLT COMPARATOR	2	U6,U23
.....3	225-0008	IC,CD4081BE	1	U12
.....3	227-0317	VR,LM317T,LM317KC	3	U3,U4,U16

©2011 Broadcast Electronics

BOM LEVEL	PART NO.	DESCRIPTION	QTY	REF. DES.
.....3	228-3525	IC,SG3525AN,PWM CONTROL	1	U13
.....3	228-4538	IC,MC14538B NATL SEMICONDUCTOR	1	U5
.....3	229-0033	IC,OPTOIS,4N33	8	U1,U2,U8,U9, U10,U11,U14, U15
.....3	229-1750	TMP01FP TEMPERATURE SENSOR CHIP	1	U25
.....3	230-0013	RECT,FAST RECOVERY,FEN30JP	1	D32
.....3	230-0015	RECT,SILC,MR2406	2	D15,D17
.....3	230-0017	RECT,PWR SWITCHMOD MUR4100E	5	D16,D34,D46, D47,D48
.....3	237-2648	SCR, 40 AMP, 600 VOLT	2	D13,D14
.....3	239-0001	BRDG RECT,FULL WAVE 2 AMP,200V	3	D9,D12,D25
.....3	239-0003	BRDG RECT,6PH20 EDI	2	D11,D10
.....3	334-0030-001	FUSE,30A,125V,1/4x1-1/4 AXIAL LEAD	2	F1,F2
.....3	340-0004	SW,JUMPER PROGRAMMABLE	3	P4,P5,P8
.....3	409-0121	PAD,TSTR MTG,TO18 CASE	2	Q8,Q9
.....3	413-0106	TERM,TEST POINT,OVAL,RED	13	TP1,TP2,TP3, TP4,TP5,TP6, TP7,TP8,TP9, TP10,TP11,T P12,TP14
.....3	417-0080-001	HEADER,8 POS R.ANGLE	0.375	J4
.....3	417-0376-001	CONN, MALE, PCB MT	1	J1
.....3	417-0600	SKT,IC 6 PIN	8	XU1,XU2,XU8 XU9,XU10, XU11,XU14, XU15
.....3	417-0804	SOCKET,8-PIN DIP,BURNDY	6	XU6,XU7, XU17,XU22, XU23,XU25
.....3	417-1276	CONN,PCB,12 PIN	1	J2
.....3	417-1404	SOCKET,14-PIN DIP	3	XU12,XU21, XU24
.....3	417-1604	SKT,16-PIN,DIP	2	XU5,XU13
.....3	417-2401	CONN,PCB,MR,MALE,24-PIN,AMP	1	J3
.....3	417-4004	CONN,HEADER,2 PIN	4	J5,J6,J7,J8
.....3	420-4106	SCREW,4-40X.375,S.S. PH	4	
.....3	420-4108	SCREW,4-40X.500,S.S. PH	3	
.....3	420-6104	SCREW,6-32X.250,S.S. PH	9	
.....3	423-4001	#4 FLAT SS .250 X .125 X .018	7	
.....3	423-4002	#4 LOCK S.S. SPLIT	7	
.....3	423-6001	#6 FLAT .250 X .150 X .015	3	
.....3	423-6002	#6 LOCK SPLIT	18	
.....3	441-0012	STOFF,#6-32 MALE-FEMALE 1/4	9	
.....3	455-0071	HEATSINK,CLIP-ON,PCB MT,TO-220	1	
.....3	455-8000-001	HEATSINK,2 INCH,A" VERSION AM"	2	
.....3	455-8001-001	HEATSINK,4 INCH,A" VERSION AM"	1	
.....3	517-0315-001	PCB MACH,POWER SUPPLY,AM-1A	1	
.....3	611-5000	TUB,HT SHK 1/2	0.1	

©2011 Broadcast Electronics

BOM LEVEL	PART NO.	DESCRIPTION	QTY	REF. DES.
.....3	690-0221	TUB,BLK HEAT SHRINK 3/4	0.125	
.....3	693-0180	TUB,TEFLON,THINWALL,AWG18,NTL	0.25	
.....3	700-0028	COMPOUND,THERM JT,TYPE 120	0.001	
....2	917-0315-003	ASSY PCB,PS BULK CAPACITOR,AM-500A	1	
.....3	013-1500	CAP,LYTIC,1500uF,450VDC	2	C24,C25
.....3	033-4763	CAP,POLY FILM,.47UF,600V,OVAL	1	C28
.....3	110-4763	RES,470K OHM,1/2W,5%	1	R129
.....3	130-1062	RES,100K OHM,2W,5%	1	R50
.....3	130-3623	RES,36 OHM,2W,5%	1	R51
.....3	420-0705	SCREW,10-32X.312,BR PH PA	4	
.....3	423-0007	#10 LOCK INT TOOTH	4	
.....3	426-8007	STUD,PEM,KFH-832-8ET,PCB MOUNT	6	E5,E6,E7,E8,E10,E11
.....3	517-0315-002	PCB MACH,PS BULK CAPACITOR,AM-1A	1	
.....3	611-0060	TUB, HT SHK, 1/16	0.25	
....2	917-0315-005	ASSY PCB,PS CAPACITOR,AM-500A	1	
.....3	014-7200	CAP,LYTIC,7200UF,200WVDC	2	C89,C88
.....3	140-0006	VARISTOR,V130LA10A,GE	1	MOV3
.....3	420-0705	SCREW,10-32X.312,BR PH PA	4	
.....3	423-0007	#10 LOCK INT TOOTH	4	
.....3	426-8007	STUD,PEM,KFH-832-8ET,PCB MOUNT	3	
.....3	517-0315-004	PCB MACH,PS CAPACITOR,AM-1A	1	
....2	917-0316	ASSY PCB,LIGHTNING PROTECT,AM-1A	1	
.....3	206-0250	TRANSZORB,250BV,1.5KE250CA	5	D1,D2,D3,D4,D5
.....3	206-0300	TRANSZORB,300V ,SMD	1	D6
.....3	517-0216	PCB MACH,LIGHTNING PROTECTION	1	
.....3	601-0018	WIRE,AWG18,BUSS	0.06	
....2	917-0321-001	ASSY PCB,COMBINER,AM-1A	1	
.....3	360-0107	ASSY,RF CHOKE AM-1A	2	L1,L2
.....4	402-0000	TY-RAP	3	
.....4	601-1220	WIRE,AWG12,19/25,TFE INS,BLU	5.833	
.....3	370-0055	ASSY,AM-1A COMBINER XFMR	2	T1,T2
.....4	375-0007-100	CORE, RF TRANSFORMER	2	
.....4	402-0066	NYLON CABLE TIE, 11-1/2 (292mm)"	1	
.....4	600-1248	WIRE,LITZ,1248/48,D.,NY,NYLEZE(NOTE	4.333	
.....4	601-1220	WIRE,AWG12,19/25,TFE INS,BLU	1.417	
.....4	601-1221	WIRE,AWG12,19/25,TFE INS,WHT	1.417	
.....4	693-0090	TUB,TEFLON,STANDARD,AWG9,NTL	4.333	
.....3	402-0001	TY-RAP,T+B TY24M,1-1/4 DIA	2	
.....3	402-0015	TIE,CBL,PANDUIT, 7 3/8 LONG"	8	
.....3	413-0106	TERM,TEST POINT,OVAL,RED	5	TP1,TP2,TP3,TP4,TP5
.....3	426-8007	STUD,PEM,KFH-832-8ET,PCB MOUNT	3	E1,E3,E4

©2011 Broadcast Electronics

BOM LEVEL	PART NO.	DESCRIPTION	QTY	REF. DES.
.....3	517-0321-001	PCB MACH,COMBINER,AM-1A	1	
.....4	517-0321	PCB,MACH,COMBINER,AM-1A	1	
....2	919-0096-001	ASSY PCB,OPTICALLY COUPLED REL NOTE	1	
.....3	000-1051	CAP,CER,DISC,.03UF,300VAC,20%	-1	
.....3	110-5633	RES,560 OHM,1/2W,5%	-1	
.....3	919-0096	ASSY PCB,OPTICALLY COUPLED REL (SBCM)	1	
.....4	000-1051	CAP,CER,DISC,.03UF,300VAC,20%	1	C3
.....4	002-1034	CAP,CER,DISC,.001UF,1000V	2	C1,C4
.....4	020-4773	CAP,LYTIC,47UF,35V,STDUP	1	C2
.....4	103-5112	RES,51.1 OHM,1/4W,1%,METAL	1	R4
.....4	110-5633	RES,560 OHM,1/2W,5%	1	R2
.....4	110-8233	RES,820 OHM,1/2W,5%	1	R3
.....4	130-2032	RES,2K OHM,10W,3%,WW	2	R1,R5
.....4	140-0023	VARISTOR,27V,V27ZA60	1	MOV1
.....4	200-5359	DIODE,ZENER,1N5359 24V 5W	1	D2
.....4	203-4005	DIODE,1N4005	2	D1,D4
.....4	229-0033	IC,OPTOIS,4N33	1	U1
.....4	239-0003	BRDG RECT,6PH20 EDI	1	D5
.....4	270-0054	REL,PC 24V T90NID1224 P&B	1	K1
.....4	270-0054-001	COVER,DUST REL 35C620 P&B	1	
.....4	330-0055	FUSE,3A,250V,PCB MOUNT	2	F1,F2
.....4	410-0025	TERM,MALE DISCONNECT PC .25TAB	5	E1,E2,E3,E4, E5
.....4	417-0600	SKT,IC 6 PIN	1	XU1
.....4	420-2504	SCREW,2-56X.250,S.S. PH FH SC	4	
.....4	420-4104	SCREW,4-40X.250,S.S. PH	2	
.....4	421-2001	2-56 S.S. NUT	4	
.....4	423-2002	#2 LOCK SPLIT	4	
.....4	423-4002	#4 LOCK S.S. SPLIT	2	
.....4	474-0347	PLATE,SOLID STATE RELAY MOUNT	1	
.....4	519-0096	PCB,MACH,OPTICALLY COUPLED RELAY	1	
.....4	601-2209	WIRE,AWG22,19/34 WHT	0.75	
....2	947-0179	WIRE HARNESS,AM-1A (SBCM)	1	
.....3	400-2170	GROMMET,FOR 3/8	2	
.....3	410-0015	LUG,TERM #8 RING CRIMP 12-10	34	
.....3	410-0050	LUG,TERM,10-12GA,FEMSPADE	5	
.....3	410-0060	LUG,TERM,#10 RING CRIMP 10-12G	12	
.....3	410-1421	LUG,QUICK DISCONNECT #18-22	6	
.....3	410-1488	LUG,TERM #6 SPADE #10-12	6	
.....3	410-1489	LUG,TERM #6 SPADE #16-22	3	
.....3	410-1553	LUG,TERM #10 RING CRIMP 16-22	2	
.....3	410-7105	LUG,TERM 1/4	1	
.....3	417-0053	SKT,CONN 641294-1 AMP	43	
.....3	417-0138	HSNG,MOD IV 4 POS 87499-7 AMP	2	
.....3	417-0142	PIN,.050 DIA 26-22 745254-3	41	
.....3	417-0251	PLUG,25 PIN 207464-1 AMP	2	

©2011 Broadcast Electronics

BOM LEVEL	PART NO.	DESCRIPTION	QTY	REF. DES.
.....3	417-0372-001	CONTACT, CONN	9	
.....3	417-0377	CONN,FEM,PLB16F0000,POSITRONIC	1	
.....3	417-0499	CONN HSNG,2POS 87499-3 AMP	1	
.....3	417-1401	HOUSING,SKT,14PIN,AMP MOD IV	1	
.....3	417-2402	HSNG,WIRE,MR,FEMALE,24-PIN,AMP	2	
.....3	417-2510	KIT,BACKSHELL FOR 25PIN D CONN	2	
.....3	417-8766	CONTACT,CRIMP,MOD-IV 87809-1	19	
.....3	418-0240	PLUG,FEM,4PIN	1	
.....3	418-0670	HOUSING,CONN,6PIN FEM	1	
.....3	418-0701	CONN,HOUSING,2 PIN	3	
.....3	601-0110	WIRE,AWG 10 65/28 BLK	5.85	
.....3	601-1202	WIRE,AWG12 19/25 RED	64	
.....3	601-1220	WIRE,AWG12,19/25,TFE INS,BLU	0.8	
.....3	601-1800	WIRE,AWG18 19/30 BLK	15	
.....3	601-2209	WIRE,AWG22,19/34 WHT	23.5	
.....3	608-0002	CBL,8 COND,SH,AWG 24,7/32	10.5	
.....3	610-8723	CBL,SH 4 COND #22 ST 8723 BELD	21.5	
.....3	611-1875	TUB,HT SHK,3/16	2.5	
.....3	621-1359	CBL,COAX,RG316/U,50 OHM	22	
.....3	622-8451	WIRE,BELD 8451,SHIELD,1PR	13.1	
.....3	682-0001	CORD LINE,3 COND,DETACH 7.5FT	1	
.....3	693-0002	SLVG,1/4 EXPANDO FR BLACK"	4	
.....3	693-0003	SLVG,1/2	5.3	
....2	947-0209	CABLE FAN KIT, AM XMTR (SBCM)	1	
.....3	417-0036	PIN CONN,AMP,350967-1	2	
.....3	417-8500	PLUG AND CORD ET,AM500 FAN	1	
.....3	418-0702	HSNG,PIN 2 PIN 1-640507 AMP	1	
..1	957-0065	KIT,CUSTOMER SERVICE PARTS AM-1A	1	
....2	330-0201	FUSE,MDA 2A 250V SLO-BLO	5	
....2	330-1502	FUSE,3AB,15A,65V,VERY FAST	2	
....2	330-2000	FUSE,20A 250V	1	
....2	334-0030-001	FUSE,30A,125V,1/4x1-1/4 AXIAL LEAD	2	
....2	334-0100	FUSE,1A MDL SLO BLO 250V	1	
....2	334-1150	FUSE,5 X 20MM,1.5A,SLO-BLO	4	
....2	350-0002	BATT,ALKALINE 9V SQ	1	
....2	375-0007-001	FERRITE CORE LARGE AM XMTR	2	
.....3	375-0007-100	CORE, RF TRANSFORMER	2	
....2	375-0009	CORE,1.102 ODX.63 IDX.512 THK	2	
....2	402-0000	TY-RAP	5	
....2	402-0001	TY-RAP,T+B TY24M,1-1/4 DIA	5	
....2	402-0006	MT,ADH BACKED,FOR CBL TIES	5	
....2	402-0015	TIE,CBL,PANDUIT, 7 3/8 LONG"	5	
....2	407-0186	TOOL,ADJ 8 T000/5 SPECTROL	1	
....2	417-0320-100	CONN,2POLE 3WIRE,20A,250V,FEML	1	
....2	463-0118	STRAP,ECU-OUTPUT NETWORK,AM500	2	

©2011 Broadcast Electronics

BOM LEVEL	PART NO.	DESCRIPTION	QTY	REF. DES.
....2	463-0122	STRAP, GND, AM-500 XMTR	1	
....2	977-1115	KIT,BIND+MAN,AM-1A/AM-500A	1	
.....3	597-1112	INSTRUCTION MANUAL, AM 500A/AM 1A TRANSMITTER	1	
.....3	598-0010-001	BINDER,1 IN, BLUE,W CD POCKET	1	

©2011 Broadcast Electronics

6.2 FREQUENCY KITS

BOM LEVEL	PART NO.	DESCRIPTION	QTY	REF. DES.
0	957-0115-001	KIT,FREQ DEP PTS 522-650 KHz AM-1A		
..1	957-1015-001	KIT,PWR MOD FD 522-650 KHz	1	
....2	042-1622	CAP,MICA,DIP,1600pF,1KV	4	C45,C56
....2	042-1832	CAP,MICA,DIP,1800pF,1KV	20	C46,C47,C48, C49,C50,C51, C52,C53,C54, C55
....2	360-0113-XXX	INDU,PA DRIVE,AM XMTR,ALL FREQ (SBCM)	4	L3,L4
.....3	360-0087	CORE,TOROID	1	
.....3	640-2200	WIRE,AWG 22,MAGNET	0.004	
....2	517-0318-001	PCB MACH,PA CAPACITOR BD ,AM XMTR	2	
.....3	517-0318	PCB MACH,PA CAP BREAKAWAY,AM XMTR	0.1	
....2	517-0319-001	PCB MACH,PA INDUCTOR BD AM XMTR	2	
.....3	517-0319	PCB MACH,PA IND BREAKAWAY AM XMTRS	0.05	
..1	957-1035-001	FREQ KIT OUTPUT NETWORK 522-650KHZ	1	
....2	044-3323-272	CAP,MICA,3300PF,3KV,6.8A,5%	1	C2
....2	044-5123-272	CAP,MICA,5100PF,3KV,8.2A,5%	2	C1,C3
....2	044-8223-272	CAP,MICA,8200PF,2KV,10A,5%	1	C4
....2	360-1101-XXX	COIL,L1,ALL FREQ AM1A	1	L1
.....3	402-0066	NYLON CABLE TIE, 11-1/2 (292mm)"	4	
.....3	410-0015	LUG,TERM #8 RING CRIMP 12-10	1	
.....3	410-0060	LUG,TERM,#10 RING CRIMP 10-12G	1	
.....3	441-9404	STOFF,PAN-POLE	2	
.....3	467-0181	COUPLING,1-1/2 SCH 40 PVC"	1	
.....3	600-1248	WIRE,LITZ,1248/48,D.,NY,NYLEZE(NOTE	14.75	
.....3	611-0938	TUBE, HEAT SHINK, 3/32, BLACK"	1.333	
....2	360-1102-XXX	COIL,L2,ALL FREQ AM1A	1	L2
.....3	402-0066	NYLON CABLE TIE, 11-1/2 (292mm)"	5	
.....3	410-0060	LUG,TERM,#10 RING CRIMP 10-12G	2	
.....3	441-9404	STOFF,PAN-POLE	2	
.....3	467-0180	COUPLING,2 SCH 40 PVC"	1	
.....3	600-1248	WIRE,LITZ,1248/48,D.,NY,NYLEZE(NOTE	21.2	
.....3	611-0938	TUBE, HEAT SHINK, 3/32, BLACK"	1.333	
....2	360-1103-XXX	COIL,L3,ALL FREQ AM1A	1	L3
.....3	402-0066	NYLON CABLE TIE, 11-1/2 (292mm)"	5	
.....3	410-0060	LUG,TERM,#10 RING CRIMP 10-12G	2	
.....3	410-1493	LUG,TERM #6 RECT 12-10 329697	1	

©2011 Broadcast Electronics

BOM LEVEL	PART NO.	DESCRIPTION	QTY	REF. DES.
.....3	441-9404	STOFF,PAN-POLE	2	
.....3	467-0181	COUPLING,1-1/2 SCH 40 PVC"	1	
.....3	471-0888	SHIELD,FARADAY,OUT NET,AM XMTR	1	
.....3	600-1248	WIRE,LITZ,1248/48,D.,NY,NYLEZE(NOTE	13.2	
.....3	601-1800	WIRE,AWG18 19/30 BLK	0.2	
			1.83	
.....3	611-0938	TUBE, HEAT SHINK, 3/32, BLACK"	3	
.....3	611-5000	TUB,HT SHK 1/2	0.2	

©2011 Broadcast Electronics

BOM LEVEL	PART NO.	DESCRIPTION	QTY	REF. DES.
0	957-0115-002	KIT,FREQ DEP PTS 651-770 KHz AM-1A		
..1	957-1015-002	KIT,PWR MOD FD 651-770 KHz AM-1A	1	
....2	042-1622	CAP,MICA,DIP,1600pF,1KV	4	C46,C55
....2	042-1832	CAP,MICA,DIP,1800pF,1KV	16	C47,C48,C49, C50,C51,C52, C53,C54
....2	360-0113-XXX	INDU,PA DRIVE,AM XMTR,ALL FREQ (SBCM)	4	L3,L4
.....3	360-0087	CORE,TOROID	1	
.....3	640-2200	WIRE,AWG 22,MAGNET	0.004	
....2	517-0318-001	PCB MACH,PA CAPACITOR BD ,AM XMTR	2	
.....3	517-0318	PCB MACH,PA CAP BREAKAWAY,AM XMTR	0.1	
....2	517-0319-001	PCB MACH,PA INDUCTOR BD AM XMTR	2	
.....3	517-0319	PCB MACH,PA IND BREAKAWAY AM XMTRS	0.05	
..1	957-1035-002	FREQ KIT OUTPUT NETWORK 651-770KHZ	1	
....2	044-2723-272	CAP,MICA,2700PF,3KV,6.8A,5%	1	C2
....2	044-4323-272	CAP,MICA,4300PF,3KV,7.5A,5%	2	C1,C3
....2	044-6823-272	CAP,MICA,6800PF,3KV,9.1A,5%	1	C4
....2	360-1101-XXX	COIL,L1,ALL FREQ AM1A	1	L1
.....3	402-0066	NYLON CABLE TIE, 11-1/2 (292mm)"	4	
.....3	410-0015	LUG,TERM #8 RING CRIMP 12-10	1	
.....3	410-0060	LUG,TERM,#10 RING CRIMP 10-12G	1	
.....3	441-9404	STOFF,PAN-POLE	2	
.....3	467-0181	COUPLING,1-1/2 SCH 40 PVC"	1	
.....3	600-1248	WIRE,LITZ,1248/48,D.,NY,NYLEZE(NOTE	14.75	
.....3	611-0938	TUBE, HEAT SHINK, 3/32, BLACK"	1.33	
....2	360-1102-XXX	COIL,L2,ALL FREQ AM1A	1	L2
.....3	402-0066	NYLON CABLE TIE, 11-1/2 (292mm)"	5	
.....3	410-0060	LUG,TERM,#10 RING CRIMP 10-12G	2	
.....3	441-9404	STOFF,PAN-POLE	2	
.....3	467-0180	COUPLING,2 SCH 40 PVC"	1	
.....3	600-1248	WIRE,LITZ,1248/48,D.,NY,NYLEZE(NOTE	21.2	
.....3	611-0938	TUBE, HEAT SHINK, 3/32, BLACK"	1.33	
....2	360-1103-XXX	COIL,L3,ALL FREQ AM1A	1	L3
.....3	402-0066	NYLON CABLE TIE, 11-1/2 (292mm)"	5	
.....3	410-0060	LUG,TERM,#10 RING CRIMP 10-12G	2	
.....3	410-1493	LUG,TERM #6 RECT 12-10 329697	1	
.....3	441-9404	STOFF,PAN-POLE	2	
.....3	467-0181	COUPLING,1-1/2 SCH 40 PVC"	1	

©2011 Broadcast Electronics

BOM LEVEL	PART NO.	DESCRIPTION	QTY	REF. DES.
.....3	471-0888	SHIELD,FARADAY,OUT NET,AM XMTR	1	
.....3	600-1248	WIRE,LITZ,1248/48,D.,NY,NYLEZE(NOTE	13.2	
.....3	601-1800	WIRE,AWG18 19/30 BLK	0.2	
.....3	611-0938	TUBE, HEAT SHINK, 3/32, BLACK"	1.833	
.....3	611-5000	TUB,HT SHK 1/2	0.2	

©2011 Broadcast Electronics

BOM LEVEL	PART NO.	DESCRIPTION	QTY	REF. DES.
0	957-0115-003	KIT,FREQ DP PTS 771-920 KHz AM-1A		
..1	957-1015-003	KIT,PWR MOD FD 771-920 KHz AM-1A	1	
....2	042-1832	CAP,MICA,DIP,1800pF,1KV	16	C47,C48,C49, C50,C51,C52, C53,C54
....2	360-0113-XXX	INDU,PA DRIVE,AM XMTR,ALL FREQ (SBCM)	4	L3,L4
.....3	360-0087	CORE,TOROID	1	
.....3	640-2200	WIRE,AWG 22,MAGNET	0.004	
....2	517-0318-001	PCB MACH,PA CAPACITOR BD ,AM XMTR	2	
.....3	517-0318	PCB MACH,PA CAP BREAKAWAY,AM XMTR	0.1	
....2	517-0319-001	PCB MACH,PA INDUCTOR BD AM XMTR	2	
.....3	517-0319	PCB MACH,PA IND BREAKAWAY AM XMTRS	0.05	
..1	957-1035-003	FREQ KIT OUTPUT NETWORK 771-920KHZ	1	
....2	044-2223-272	CAP,MICA,2200PF,5KV,6.2A,5%	1	C2
....2	044-3623-272	CAP,MICA,3600PF,3KV,7.5A,5%	2	C1,C3
....2	044-5623-272	CAP,MICA,5600PF,3KV,9.1A,5%	1	C4
....2	360-1101-XXX	COIL,L1,ALL FREQ AM1A	1	L1
.....3	402-0066	NYLON CABLE TIE, 11-1/2 (292mm)"	4	
.....3	410-0015	LUG,TERM #8 RING CRIMP 12-10	1	
.....3	410-0060	LUG,TERM,#10 RING CRIMP 10-12G	1	
.....3	441-9404	STOFF,PAN-POLE	2	
.....3	467-0181	COUPLING,1-1/2 SCH 40 PVC"	1	
.....3	600-1248	WIRE,LITZ,1248/48,D.,NY,NYLEZE(NOTE	14.75	
.....3	611-0938	TUBE, HEAT SHINK, 3/32, BLACK"	1.333	
....2	360-1102-XXX	COIL,L2,ALL FREQ AM1A	1	L2
.....3	402-0066	NYLON CABLE TIE, 11-1/2 (292mm)"	5	
.....3	410-0060	LUG,TERM,#10 RING CRIMP 10-12G	2	
.....3	441-9404	STOFF,PAN-POLE	2	
.....3	467-0180	COUPLING,2 SCH 40 PVC"	1	
.....3	600-1248	WIRE,LITZ,1248/48,D.,NY,NYLEZE(NOTE	21.2	
.....3	611-0938	TUBE, HEAT SHINK, 3/32, BLACK"	1.333	
....2	360-1103-XXX	COIL,L3,ALL FREQ AM1A	1	L3
.....3	402-0066	NYLON CABLE TIE, 11-1/2 (292mm)"	5	
.....3	410-0060	LUG,TERM,#10 RING CRIMP 10-12G	2	
.....3	410-1493	LUG,TERM #6 RECT 12-10 329697	1	
.....3	441-9404	STOFF,PAN-POLE	2	

©2011 Broadcast Electronics

BOM LEVEL	PART NO.	DESCRIPTION	QTY	REF. DES.
.....3	467-0181	COUPLING,1-1/2 SCH 40 PVC"	1	
.....3	471-0888	SHIELD,FARADAY,OUT NET,AM XMTR	1	
.....3	600-1248	WIRE,LITZ,1248/48,D.,NY,NYLEZE(NOTE	13.2	
.....3	601-1800	WIRE,AWG18 19/30 BLK	0.2	
			1.83	
.....3	611-0938	TUBE, HEAT SHINK, 3/32, BLACK"	3	
.....3	611-5000	TUB,HT SHK 1/2	0.2	

©2011 Broadcast Electronics

BOM LEVEL	PART NO.	DESCRIPTION	QTY	REF. DES.
0	957-0115-004	KIT,FREQ DP PTS 921-1080 KHz AM-1A		
..1	957-1015-004	KIT,PWR MOD FD 921-1080 KHz AM-1A	1	
....2	042-1622	CAP,MICA,DIP,1600pF,1KV	4	C48,C53
....2	042-1832	CAP,MICA,DIP,1800pF,1KV	8	C49,C50,C51, C52
....2	042-9122	CAP,MICA,DIP,910pF,1KV	4	C47,C54
....2	360-0113-XXX	INDU,PA DRIVE,AM XMTR,ALL FREQ (SBCM)	4	L5,L7
.....3	360-0087	CORE,TOROID	1	
.....3	640-2200	WIRE,AWG 22,MAGNET	0.004	
....2	517-0318-001	PCB MACH,PA CAPACITOR BD ,AM XMTR	2	
.....3	517-0318	PCB MACH,PA CAP BREAKAWAY,AM XMTR	0.1	
....2	517-0319-001	PCB MACH,PA INDUCTOR BD AM XMTR	2	
.....3	517-0319	PCB MACH,PA IND BREAKAWAY AM XMTRS	0.05	
..1	957-1035-004	FREQ KIT OUTPUT NETWORK 921-1080KHZ	1	
....2	044-1823-272	CAP,MICA,1800PF,5KV,5.6A,5%	1	C2
....2	044-3323-272	CAP,MICA,3300PF,3KV,6.8A,5%	2	C1,C3
....2	044-4723-272	CAP,MICA,4700PF,3KV,8.2A,5%	1	C4
....2	360-1101-XXX	COIL,L1,ALL FREQ AM1A	1	L1
.....3	402-0066	NYLON CABLE TIE, 11-1/2 (292mm)"	4	
.....3	410-0015	LUG,TERM #8 RING CRIMP 12-10	1	
.....3	410-0060	LUG,TERM,#10 RING CRIMP 10-12G	1	
.....3	441-9404	STOFF,PAN-POLE	2	
.....3	467-0181	COUPLING,1-1/2 SCH 40 PVC"	1	
.....3	600-1248	WIRE,LITZ,1248/48,D.,NY,NYLEZE(NOTE	14.75	
.....3	611-0938	TUBE, HEAT SHINK, 3/32, BLACK"	1.333	
....2	360-1102-XXX	COIL,L2,ALL FREQ AM1A	1	L2
.....3	402-0066	NYLON CABLE TIE, 11-1/2 (292mm)"	5	
.....3	410-0060	LUG,TERM,#10 RING CRIMP 10-12G	2	
.....3	441-9404	STOFF,PAN-POLE	2	
.....3	467-0180	COUPLING,2 SCH 40 PVC"	1	
.....3	600-1248	WIRE,LITZ,1248/48,D.,NY,NYLEZE(NOTE	21.2	
.....3	611-0938	TUBE, HEAT SHINK, 3/32, BLACK"	1.333	
....2	360-1103-XXX	COIL,L3,ALL FREQ AM1A	1	L3
.....3	402-0066	NYLON CABLE TIE, 11-1/2 (292mm)"	5	
.....3	410-0060	LUG,TERM,#10 RING CRIMP 10-12G	2	
.....3	410-1493	LUG,TERM #6 RECT 12-10 329697	1	
.....3	441-9404	STOFF,PAN-POLE	2	
.....3	467-0181	COUPLING,1-1/2 SCH 40 PVC"	1	
.....3	471-0888	SHIELD,FARADAY,OUT NET,AM XMTR	1	
.....3	600-1248	WIRE,LITZ,1248/48,D.,NY,NYLEZE(NOTE	13.2	
.....3	601-1800	WIRE,AWG18 19/30 BLK	0.2	
.....3	611-0938	TUBE, HEAT SHINK, 3/32, BLACK"	1.833	
.....3	611-5000	TUB,HT SHK 1/2	0.2	

©2011 Broadcast Electronics

BOM LEVEL	PART NO.	DESCRIPTION	QTY	REF. DES.
0	957-0115-005	KIT,FREQ DP PTS 1081-1300 KHz AM-1A		
..1	957-1015-005	KIT,PWR MOD FD 1081-1300 KHz AM-1A	1	
....2	042-1622	CAP,MICA,DIP,1600pF,1KV	4	C48,C53
....2	042-1832	CAP,MICA,DIP,1800pF,1KV	8	C49,C50,C51C52
....2	360-0113-XXX	INDU,PA DRIVE,AM XMTR,ALL FREQ (SBCM)	4	L5,L7
.....3	360-0087	CORE,TOROID	1	
.....3	640-2200	WIRE,AWG 22,MAGNET	0.004	
....2	517-0318-001	PCB MACH,PA CAPACITOR BD ,AM XMTR	2	
.....3	517-0318	PCB MACH,PA CAP BREAKAWAY,AM XMTR	0.1	
....2	517-0319-001	PCB MACH,PA INDUCTOR BD AM XMTR	2	
.....3	517-0319	PCB MACH,PA IND BREAKAWAY AM XMTRS	0.05	
..1	957-1035-005	FREQ KIT OUTPUT NET 1081-1300KHZ	1	
....2	044-1623-272	CAP,MICA,1600PF,5KV,5.6A,5%	1	C2
....2	044-2723-272	CAP,MICA,2700PF,3KV,6.8A,5%	2	C1,C3
....2	044-3923-272	CAP,MICA,3900PF,3KV,7.5A,5%	1	C4
....2	360-1101-XXX	COIL,L1,ALL FREQ AM1A	1	L1
.....3	402-0066	NYLON CABLE TIE, 11-1/2 (292mm)"	4	
.....3	410-0015	LUG,TERM #8 RING CRIMP 12-10	1	
.....3	410-0060	LUG,TERM,#10 RING CRIMP 10-12G	1	
.....3	441-9404	STOFF,PAN-POLE	2	
.....3	467-0181	COUPLING,1-1/2 SCH 40 PVC"	1	
.....3	600-1248	WIRE,LITZ,1248/48,D.,NY,NYLEZE(NOTE	14.75	
.....3	611-0938	TUBE, HEAT SHINK, 3/32, BLACK"	1.333	
....2	360-1102-XXX	COIL,L2,ALL FREQ AM1A	1	L2
.....3	402-0066	NYLON CABLE TIE, 11-1/2 (292mm)"	5	
.....3	410-0060	LUG,TERM,#10 RING CRIMP 10-12G	2	
.....3	441-9404	STOFF,PAN-POLE	2	
.....3	467-0180	COUPLING,2 SCH 40 PVC"	1	
.....3	600-1248	WIRE,LITZ,1248/48,D.,NY,NYLEZE(NOTE	21.2	
.....3	611-0938	TUBE, HEAT SHINK, 3/32, BLACK"	1.333	
....2	360-1103-XXX	COIL,L3,ALL FREQ AM1A	1	L3
.....3	402-0066	NYLON CABLE TIE, 11-1/2 (292mm)"	5	
.....3	410-0060	LUG,TERM,#10 RING CRIMP 10-12G	2	
.....3	410-1493	LUG,TERM #6 RECT 12-10 329697	1	
.....3	441-9404	STOFF,PAN-POLE	2	
.....3	467-0181	COUPLING,1-1/2 SCH 40 PVC"	1	
.....3	471-0888	SHIELD,FARADAY,OUT NET,AM XMTR	1	
.....3	600-1248	WIRE,LITZ,1248/48,D.,NY,NYLEZE(NOTE	13.2	
.....3	601-1800	WIRE,AWG18 19/30 BLK	0.2	
.....3	611-0938	TUBE, HEAT SHINK, 3/32, BLACK"	1.833	
.....3	611-5000	TUB,HT SHK 1/2	0.2	

©2011 Broadcast Electronics

BOM LEVEL	PART NO.	DESCRIPTION	QTY	REF. DES.
0	957-0115-006	KIT,FREQ DP PTS 1301-1580 KHz AM-1A		
..1	957-1015-006	KIT,PWR MOD FD 1301-1580 KHz AM-1A	1	
....2	042-1622	CAP,MICA,DIP,1600pF,1KV	8	C49,C52,C50, C51
....2	042-9122	CAP,MICA,DIP,910pF,1KV	4	C48,C53
....2	360-0113-XXX	INDU,PA DRIVE,AM XMTR,ALL FREQ (SBCM)	6	L5,L6,L7
.....3	360-0087	CORE,TOROID	1	
.....3	640-2200	WIRE,AWG 22,MAGNET	0.004	
....2	517-0318-001	PCB MACH,PA CAPACITOR BD ,AM XMTR	2	
.....3	517-0318	PCB MACH,PA CAP BREAKAWAY,AM XMTR	0.1	
....2	517-0319-001	PCB MACH,PA INDUCTOR BD AM XMTR	2	
.....3	517-0319	PCB MACH,PA IND BREAKAWAY AM XMTRS	0.05	
..1	957-1035-006	FREQ KIT OUTPUT NET 1301-1580KHZ	1	
....2	044-1323-272	CAP,MICA,1300PF,5KV,5.1A,5%	1	C2
....2	044-2223-272	CAP,MICA,2200PF,5KV,6.2A,5%	2	C1,C3
....2	044-3323-272	CAP,MICA,3300PF,3KV,6.8A,5%	1	C4
....2	360-1101-XXX	COIL,L1,ALL FREQ AM1A	1	L1
.....3	402-0066	NYLON CABLE TIE, 11-1/2 (292mm)"	4	
.....3	410-0015	LUG,TERM #8 RING CRIMP 12-10	1	
.....3	410-0060	LUG,TERM,#10 RING CRIMP 10-12G	1	
.....3	441-9404	STOFF,PAN-POLE	2	
.....3	467-0181	COUPLING,1-1/2 SCH 40 PVC"	1	
.....3	600-1248	WIRE,LITZ,1248/48,D.,NY,NYLEZE(NOTE	14.75	
.....3	611-0938	TUBE, HEAT SHINK, 3/32, BLACK"	1.333	
....2	360-1102-XXX	COIL,L2,ALL FREQ AM1A	1	L2
.....3	402-0066	NYLON CABLE TIE, 11-1/2 (292mm)"	5	
.....3	410-0060	LUG,TERM,#10 RING CRIMP 10-12G	2	
.....3	441-9404	STOFF,PAN-POLE	2	
.....3	467-0180	COUPLING,2 SCH 40 PVC"	1	
.....3	600-1248	WIRE,LITZ,1248/48,D.,NY,NYLEZE(NOTE	21.2	
.....3	611-0938	TUBE, HEAT SHINK, 3/32, BLACK"	1.333	
....2	360-1103-XXX	COIL,L3,ALL FREQ AM1A	1	L3
.....3	402-0066	NYLON CABLE TIE, 11-1/2 (292mm)"	5	
.....3	410-0060	LUG,TERM,#10 RING CRIMP 10-12G	2	
.....3	410-1493	LUG,TERM #6 RECT 12-10 329697	1	
.....3	441-9404	STOFF,PAN-POLE	2	
.....3	467-0181	COUPLING,1-1/2 SCH 40 PVC"	1	
.....3	471-0888	SHIELD,FARADAY,OUT NET,AM XMTR	1	
.....3	600-1248	WIRE,LITZ,1248/48,D.,NY,NYLEZE(NOTE	13.2	
.....3	601-1800	WIRE,AWG18 19/30 BLK	0.2	
.....3	611-0938	TUBE, HEAT SHINK, 3/32, BLACK"	1.833	
.....3	611-5000	TUB,HT SHK 1/2	0.2	

©2011 Broadcast Electronics

BOM LEVEL	PART NO.	DESCRIPTION	QTY	REF. DES.
0	957-0115-007	KIT,FREQ DP PTS 1581-1700 KHz AM-1A		
..1	957-1015-007	KIT,PWR MOD FD 1581-1700 KHz AM-1A	1	
....2	042-1622	CAP,MICA,DIP,1600pF,1KV	4	C49,C52
....2	042-1832	CAP,MICA,DIP,1800pF,1KV	4	C50,C51
....2	360-0113-XXX	INDU,PA DRIVE,AM XMTR,ALL FREQ (SBCM)	6	L5,L6,L7
.....3	360-0087	CORE,TOROID	1	
.....3	640-2200	WIRE,AWG 22,MAGNET	0.004	
....2	517-0318-001	PCB MACH,PA CAPACITOR BD ,AM XMTR	2	
.....3	517-0318	PCB MACH,PA CAP BREAKAWAY,AM XMTR	0.1	
....2	517-0319-001	PCB MACH,PA INDUCTOR BD AM XMTR	2	
.....3	517-0319	PCB MACH,PA IND BREAKAWAY AM XMTRS	0.05	
..1	957-1035-007	FREQ KIT OUTPUT NET 1581-1705KHZ	1	
....2	044-1123-272	CAP,MICA,1100PF,5KV,4.7A,5%	1	C2
....2	044-1823-272	CAP,MICA,1800PF,5KV,5.6A,5%	2	C1,C3
....2	044-2723-272	CAP,MICA,2700PF,3KV,6.8A,5%	1	C4
....2	360-1101-XXX	COIL,L1,ALL FREQ AM1A	1	L1
.....3	402-0066	NYLON CABLE TIE, 11-1/2 (292mm)"	4	
.....3	410-0015	LUG,TERM #8 RING CRIMP 12-10	1	
.....3	410-0060	LUG,TERM,#10 RING CRIMP 10-12G	1	
.....3	441-9404	STOFF,PAN-POLE	2	
.....3	467-0181	COUPLING,1-1/2 SCH 40 PVC"	1	
.....3	600-1248	WIRE,LITZ,1248/48,D.,NY,NYLEZE(NOTE	14.75	
.....3	611-0938	TUBE, HEAT SHINK, 3/32, BLACK"	1.333	
....2	360-1102-XXX	COIL,L2,ALL FREQ AM1A	1	L2
.....3	402-0066	NYLON CABLE TIE, 11-1/2 (292mm)"	5	
.....3	410-0060	LUG,TERM,#10 RING CRIMP 10-12G	2	
.....3	441-9404	STOFF,PAN-POLE	2	
.....3	467-0180	COUPLING,2 SCH 40 PVC"	1	
.....3	600-1248	WIRE,LITZ,1248/48,D.,NY,NYLEZE(NOTE	21.2	
.....3	611-0938	TUBE, HEAT SHINK, 3/32, BLACK"	1.333	
....2	360-1103-XXX	COIL,L3,ALL FREQ AM1A	1	L3
.....3	402-0066	NYLON CABLE TIE, 11-1/2 (292mm)"	5	
.....3	410-0060	LUG,TERM,#10 RING CRIMP 10-12G	2	
.....3	410-1493	LUG,TERM #6 RECT 12-10 329697	1	
.....3	441-9404	STOFF,PAN-POLE	2	
.....3	467-0181	COUPLING,1-1/2 SCH 40 PVC"	1	
.....3	471-0888	SHIELD,FARADAY,OUT NET,AM XMTR	1	
.....3	600-1248	WIRE,LITZ,1248/48,D.,NY,NYLEZE(NOTE	13.2	
.....3	601-1800	WIRE,AWG18 19/30 BLK	0.2	
.....3	611-0938	TUBE, HEAT SHINK, 3/32, BLACK"	1.833	
.....3	611-5000	TUB,HT SHK 1/2	0.2	

©2011 Broadcast Electronics

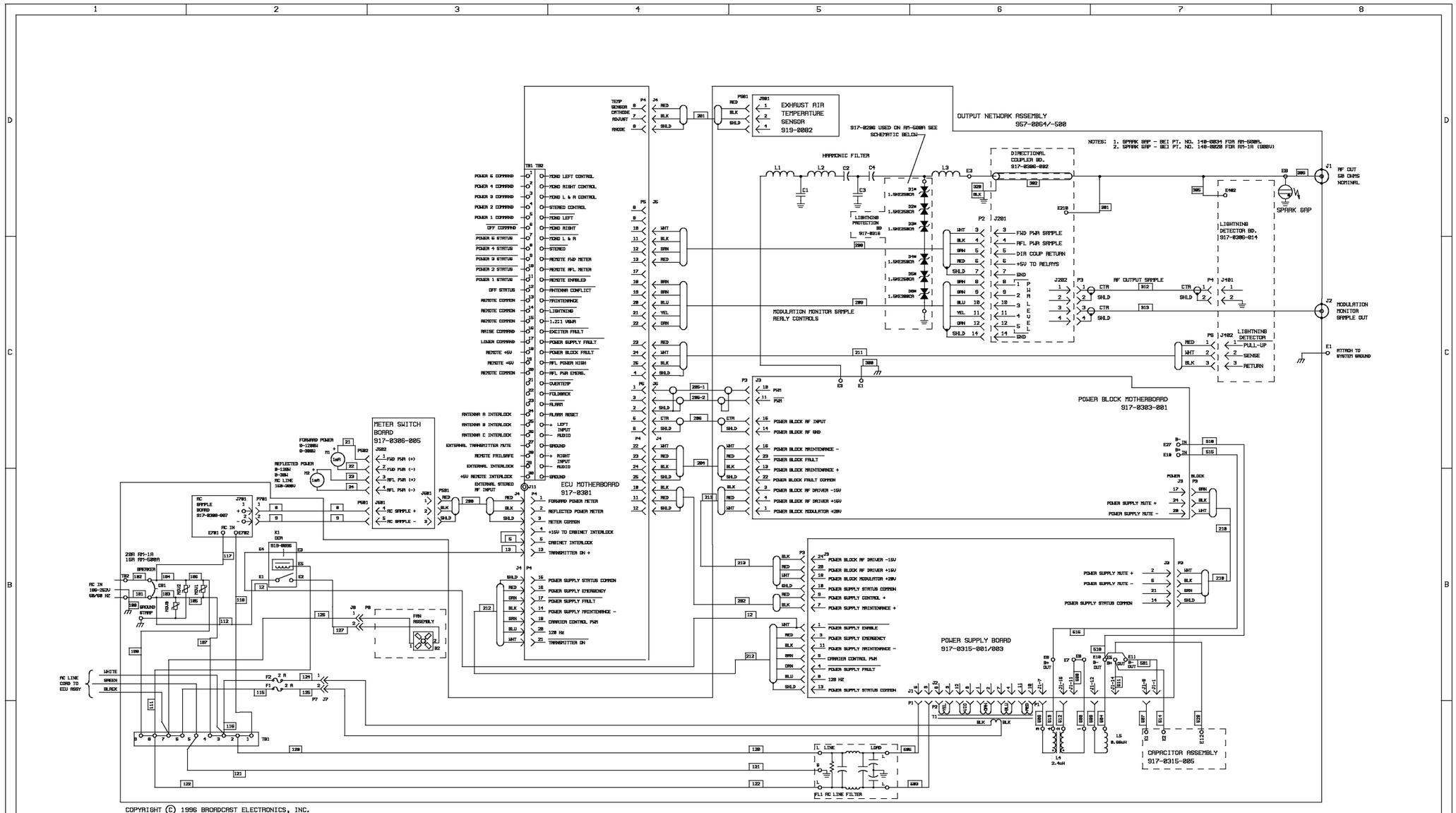

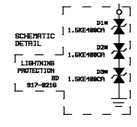

COPYRIGHT © 1996 BROADCAST ELECTRONICS, INC.

PROPRIETARY NOTICE: This information is submitted in confidence and neither this document nor the information disclosed herein shall be reproduced or transferred to other documents or used or disclosed to others for manufacturing or for any other purpose except as specifically authorized in writing by BROADCAST ELECTRONICS, INC.

TOLERANCE (DECIMAL) U.O.S.
.X ± .030 .XXX ± .005
.XX ± .015 ANGLES ± 1°

DWN. BY M.MERKEL 1-30-96
DESIGNER (S)
PROJ. LEADER
MFG.

MATERIAL: SEE B/M 907-1000-001
FINISH
NEXT ASSY.

BROADCAST ELECTRONICS INC.
4100 N.24TH ST.,P.O.BOX 3686 QUINCY,IL 62305 217/224-9600
TELEX 250142 CABLE BROADCAST FAX 217/224-9607

TITLE: OVERALL SCHEMATIC AM-1A

TYPE	SIZE	DWG. NO.	REV
S	B	907-1000-001/907-0500-001	F

MODEL AM-1A/AM-500A SCALE NONE SHEET 1 OF 1

B	12-9-96	ADDED T2, DELETED R1 & MOVED C1.	MH	JW	9738
C	10-17-97	ADDED NOTES & CHART.	KT	JW	9878
D	12-17-97	ADDED J1C & J1F PIN 2 TO B+.	KT	JW	9915
E	4-30-98	ADDED TEST POINTS TP1-TP10.	MSE	JW	9969
F	7-31-00	CORRECTED P1 WIRING	JTB	JW	10324
G	4-4-08	ADD PIN3 ON J1C	JTB		11621

REVISIONS

REV	DATE	DESCRIPTION	DFTSMN	ENGR	ECN
1	2-27-96	PROTOTYPE RELEASE	MH	JW	----
2	4-12-96	ADDED CHASSIS GND (11 PLCS)TO MOTHERBOARD;CHGD E13 TO E7,E14 TO E9, ADDED E6 & E8 AND CONNECTED E6-E9 ON COMBINER BOARD.	MH	JW	----
3	5-20-96	ADDED C1,C2,R1,T1,J2A-2,J2B-2,J2D-2,J2E-2;DELETED J1A-7/8,J1B-7/8,J1C-6,J1D-7/8,J1E-7/8 & J1F-6.	MH	JW	----
A	8-13-96	ENGINEERING RELEASE WITHOUT CHANGE OF 917-0303-001.	MH	JW	----

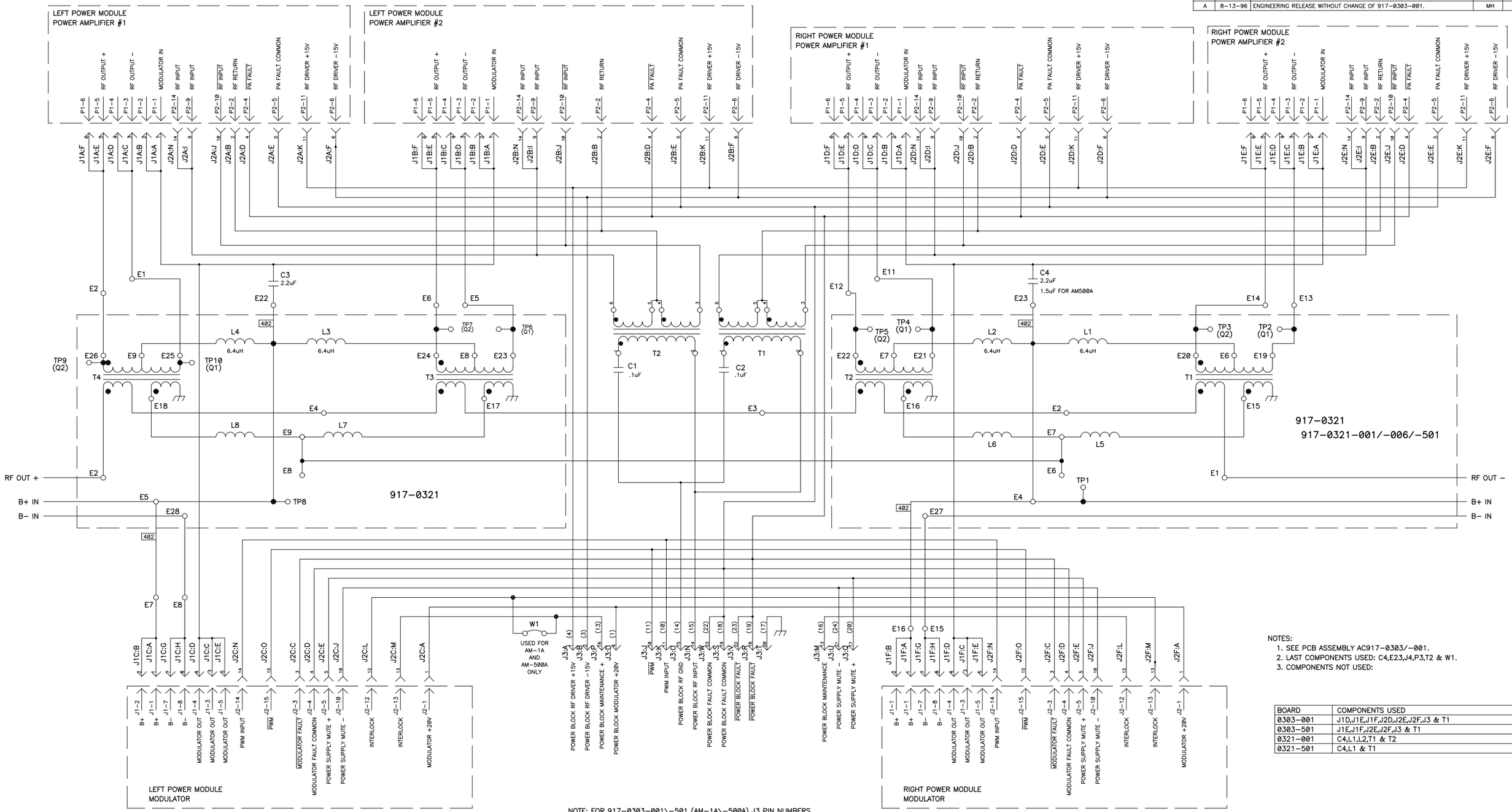

NOTE: FOR 917-0303-001\-501 (AM-1A\-500A) J3 PIN NUMBERS ARE SHOWN IN PARENTHESES ( ).

NOTES:
1. SEE PCB ASSEMBLY AC917-0303/-001.
2. LAST COMPONENTS USED: C4,E23,J4,P3,T2 & W1.
3. COMPONENTS NOT USED:

BOARD	COMPONENTS USED
0303-001	J1D,J1E,J1F,J2D,J2E,J2F,J3 & T1
0303-501	J1E,J1F,J2E,J2F,J3 & T1
0321-001	C4,L1,L2,T1 & T2
0321-501	C4,L1 & T1

COPYRIGHT C 2006 BROADCAST ELECTRONICS, INC.

PROPRIETARY RIGHTS are included in information disclosed herein. This information is submitted in confidence and neither this document nor the information disclosed herein shall be reproduced or transferred to other documents or used or disclosed to others for manufacturing or for any other purpose except as specifically authorized in writing by BROADCAST ELECTRONICS, INC.

TOLERANCE (DECIMAL) U.O.S.
.x + .030 .xxx + .005
.xx + .015 ANGLES + 1

DWN. BY 2-27-96
DESIGNER(S) M. HAYDEN
DATE JW 8-16-96
MFG.

MATERIAL SEE BOM'S 917-0303 917-0303-001 917-0303-501
FINISH
NEXT ASSY.

BROADCAST ELECTRONICS INC.
4100 N. 24TH ST., P.O.BOX 3606 QUINCY, IL 62305
217/224-9600 FAX 217/224-9607

TITLE SCHEMATIC - POWER BLOCK MOTHERBOARD & COMBINER

TYPE	SIZE	DWG. NO.	REV
S	D	917-0303/001/-501	G

MODEL AM-1A SCALE NONE SHEET 1 OF 1

REVISIONS					
REV	DATE	DESCRIPTION	DFTSMN	ENGR	ECN
1	3-4-96	PROTOTYPE RELEASE.	MH	JW	----
2	6-27-96	ADDED C1,C2,R1 & T1.	MH	JW	----
3	7-23-96	UPDATED ASSEMBLY NOTES AND ADDED W1.	MH	JW	----
A	8-13-96	ENGINEERING RELEASE WITHOUT CHANGE OF 917-0303-001.	MH	JW	----
B	12-10-96	ADDED T2, DELETED R1 & MOVED C1.	MH	JW	9738
C	10-17-97	ADDED -501 BOARD.	KT	JW	9878
D	12-18-97	TIED PIN 2 OF J1C & J1F TO PIN 1 RESPECTFULLY.	KT	JW	9915
E	3-2-98	CHGD BLANK BOARD TO CLEAR COPPER AWAY FROM EDGES OF MOUNTING HOLES (12 PLCS) FOR J2A-J2F.	MH	JW	9945
F	4-27-98	ORG WIRE WAS BRN, REMOVED -501	MSE	JW	9966
G	10-18-06	MADE J2-A THRU J2-F BTM PADS SAME AS TOP PADS DUE TO SHORTS	JTB	JW	11474
H	4-4-08	ADD PIN3 TO J1C	JTB		11621

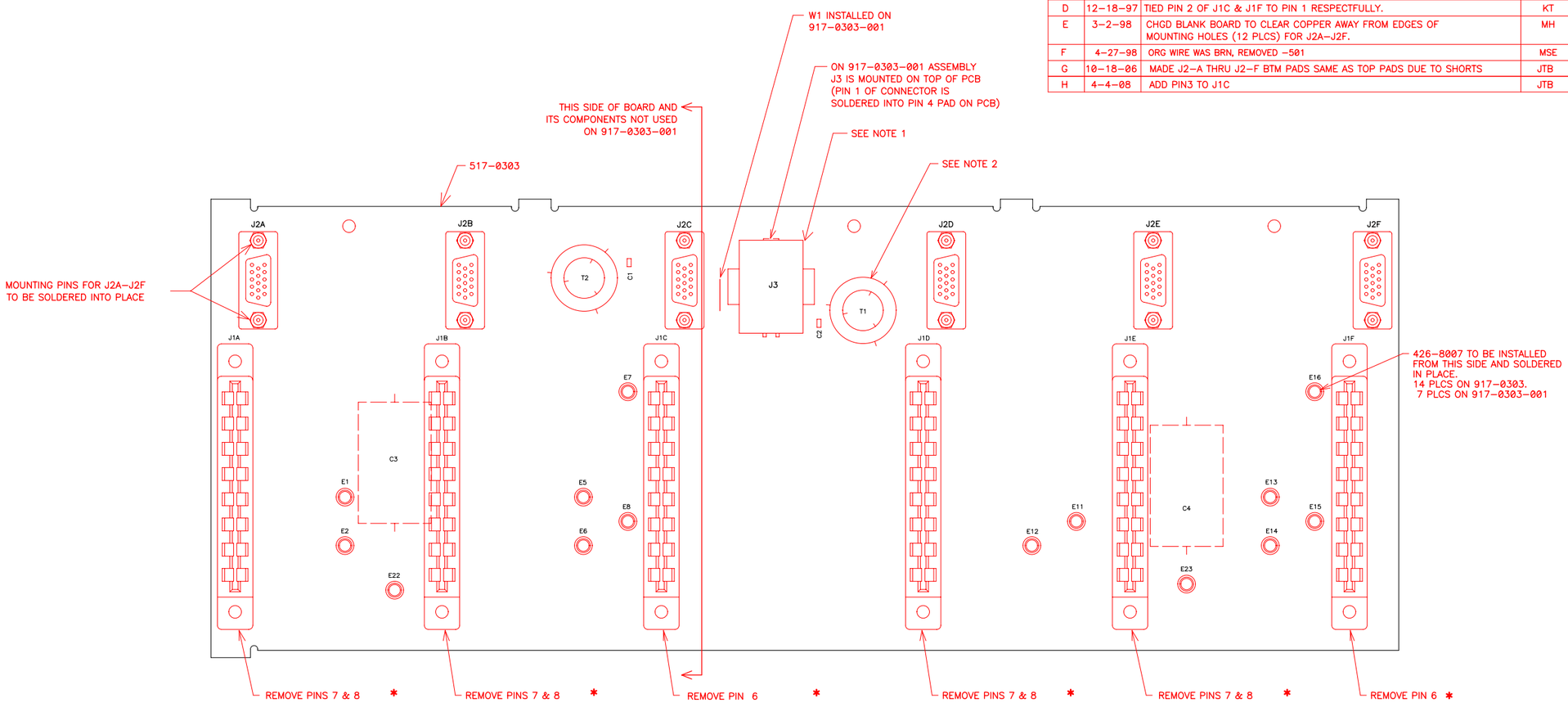

NOTES:

1. COMPONENTS SHOWN WITH DASHED LINES TO BE MOUNTED FROM OPPOSITE SIDE.
2. TERMINALS 1-2 ARE BLU; 3-4 ARE WHT; 5-6 ARE ORG.

* USE AMP TOOL #91116-1 TO REMOVE DESIGNATED PINS FROM J1A-J1F.

COPYRIGHT © 2006 BROADCAST ELECTRONICS, INC.

PROPRIETARY RIGHTS are included in information disclosed herein. This information is submitted in confidence and neither this document nor the information disclosed herein shall be reproduced or transferred to other documents or used or disclosed to others for manufacturing or for any other purpose except as specifically authorized in writing by BROADCAST ELECTRONICS, INC.

TOLERANCE (DECIMAL) U.O.S.
.X + .030 .XXX + .005
.XX + .015 ANGLES + 1 °

DWN. BY 3-4-96 M. HAYDEN
CHKD
ME
PROJ. ENGR. 3-4-96 J. WESTBERG
MFG.

MATERIAL SEE B/M 917-0303 917-0303-001
FINISH
SEE DWG RA592-0000
NEXT ASSY.

BROADCAST ELECTRONICS INC.
4100 N.24TH ST. P.O.BOX 3606 QUINCY,IL. 62305 PH. 217/224-9600
TELEX 250142 CABLE BROADCAST FAX 217/224-9607

TITLE PCB ASSEMBLY POWER BLOCK MOTHER BD

TYPE	SIZE	DWG No.	REV
A	C	917-0303 917-0303-001	H

MODEL AM-1A SCALE 1/1 SHEET 1 OF 1

REVISIONS					
REV	DATE	DESCRIPTION	DFTSMN	ENGR	ECN
C	7-14-86	ENGINEERING RELEASE	MSE	JHS	6434
D	9-23-86	ADDED 919-0096-001	MSE	DBM	6540
E	1-28-87	SWITCHED "TO..., & SOURCE..."	MSE	DBM	6727
F	8-27-87	PER ECN	MERK	MBS	6960
G	7-6-88	CHGD R1 FROM 4K TO 2K	JAH	TJL	7419
H	9-20-92	REDESIGN	CR	BG	8833
J	12-29-92	SWITCHED D4 AND D1, C2 WAS 100uf	CR		8833A

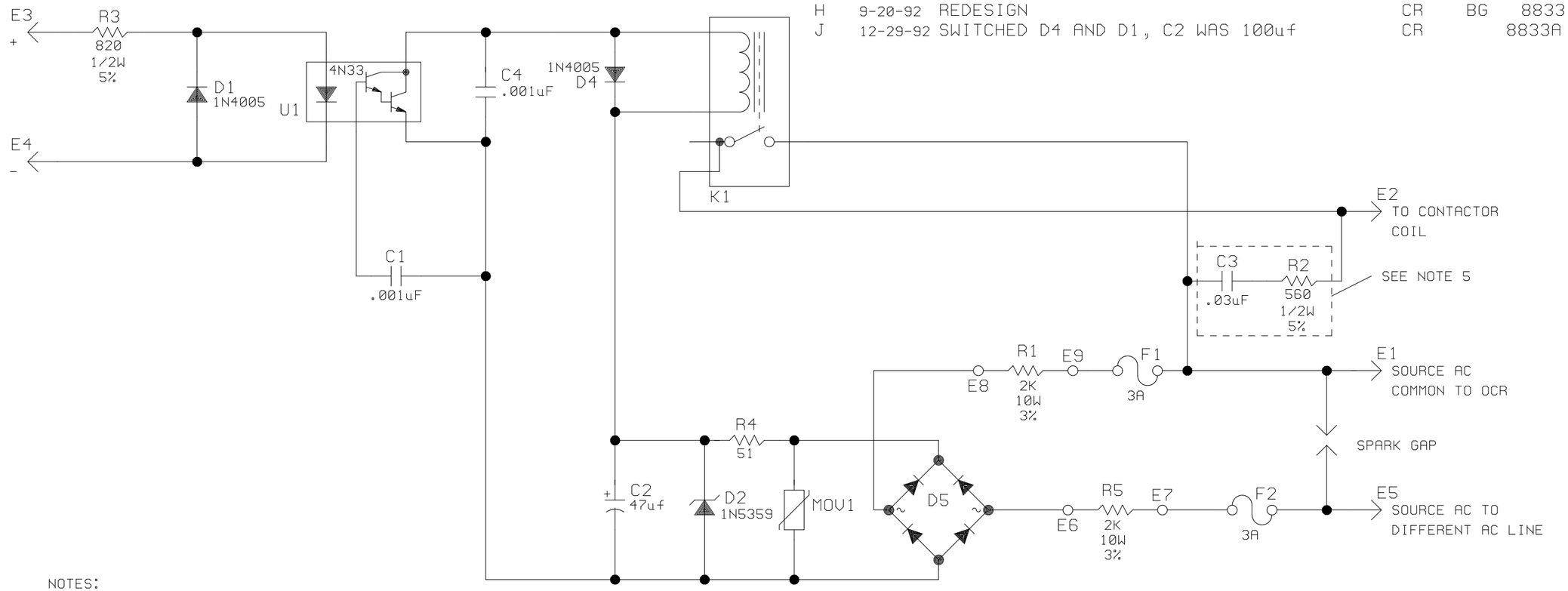

NOTES:

1. ALL RESISTORS IN OHMS; 1/4W, 1% UNLESS OTHERWISE SPECIFIED.
2. LAST COMPONENT USED:R5,F2,MOV1,C4, D4,U1,K1,E9
3. COMPONENTS NOT USED:D3
4. SEE ASSEMBLY:AB 919-0096
5. THESE COMPONENTS NOT USED ON 919-0096-001 C3,R2

COPYRIGHT © 1991 BROADCAST ELECTRONICS, INC.

PROPRIETARY RIGHTS are included in information disclosed herein. This information is submitted in confidence and neither this document nor the information disclosed herein shall be reproduced or transferred to other documents or used or disclosed to others for manufacturing or for any other purpose except as specifically authorized in writing by BROADCAST ELECTRONICS, INC.

TOLERANCE (DECIMAL) U.O.S.
.x ± .030 .xxx ± .005
.xx ± .015 ANGLES ± 1°

DWN. BY JAH 11-26-91
CHKD BG 11-92
ME
PROJ. ENGR. BG 11-92
MFG.

MATERIAL SEE B/M 919-0096 919-0096-001
FINISH SEE DWG RA592-0000
NEXT ASSY.

BROADCAST ELECTRONICS INC.
4100 N. 24TH ST., P.O.BOX 3606 QUINCY, IL. 62305 217/224-9600
TELEX 250142 CABLE BROADCAST FAX 217/224-9607

TITLE OPTICALLY COUPLED RELAY

TYPE	SIZE	DWG. NO.	REV
S	B	919-0096,-001	J

MODEL FM XMTR'S SCALE NONE SHEET 1 OF

REVISIONS					
REV	DATE	DESCRIPTION	DRAFTER	APPROVED	ECN
C	7-14-86	ENGINEERING RELEASE	MSE	JHS	6434
D	9-23-86	ADDED 919-0096-001	MSE	DBM	6540
E	2-4-87	MOVED E4 90 DEG.	MSE	DBM	6741
F	8-27-87	REVISED PER ECN	MERK	MBS	6960
G	7-6-88	CHG'D P/N OF RESISTOR FROM 130-4044	JAH	TJL	7419
H	1-12-89	MOVED 24" WIRE AND LUG	PRD	DBM	7620
J	9-20-92	REDESIGN	JAH/CR	BG	8833
K	2-4-93	CHANGED SIZE OF MOUNTING HOLE TO .343 DIA	CR	BG	8885
L	6-15-93	ADDED .125" TO LEFT & RIGHT SIDES OF BOARD.	MH	BG	8989
M	3-26-97	ADDED R2 AND C3 NOTE	MSE		9673
N	8-29-97	SHT. 2, ADDED WIRE LENGTH NOTE	MSE		9836
P	11-7-00	CHGD HOLE SIZE OF SEVERAL COMPONENTS	KT	DDL	10388
R	6-20-02	MOVED PARTS, ADDED ASSY NUMBER	KT		10717

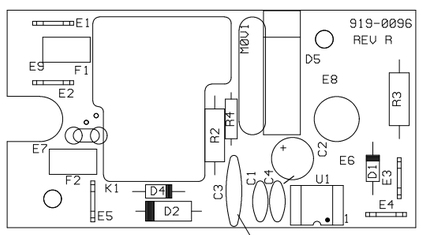

REMOVE R2 AND C3 FROM 919-0096
TO MAKE 919-0096-001

COPYRIGHT © 1991 BROADCAST ELECTRONICS, INC.

PROPRIETARY RIGHTS are included in information disclosed herein. This information is submitted in confidence and neither this document nor the information disclosed herein shall be reproduced or transferred to other documents or used or disclosed to others for manufacturing or for any other purpose except as specifically authorized in writing by BROADCAST ELECTRONICS, INC.

TOLERANCE (DECIMAL) U.O.S.
.X ± .030 .XXX ± .005
.XX ± .015 ANGLES + 1°

DWN. BY: JAH 12-13-91
DESIGNER(S):
PROJ. LEADER: J.TUCKER 7-14-86
MFG.: J.STEINKAMP 7-14-86

MATERIAL: SEE B/M 919-0096 919-0096-001
FINISH: ~~SEE DWG RA592-0000~~
NEXT ASSY.:

BROADCAST ELECTRONICS INC.
4100 N.24TH ST. P.O.BOX 3606 QUINCY,IL. 62305 PH. 217/224-9600
TELEX 250142 CABLE BROADCAST FAX 217/224-9607

TITLE: PCB ASSEMBLY
OPTICALLY COUPLED RELAY BD.

TYPE	SIZE	DWG No.	REV
A	B	919-0096, 919-0096-001	R

MODEL: TRANSMITTERS
SCALE: 1=1
SHEET 1 OF 2

REVISIONS					
REV	DATE	DESCRIPTION	DRAFTER	APPROVED	ECN

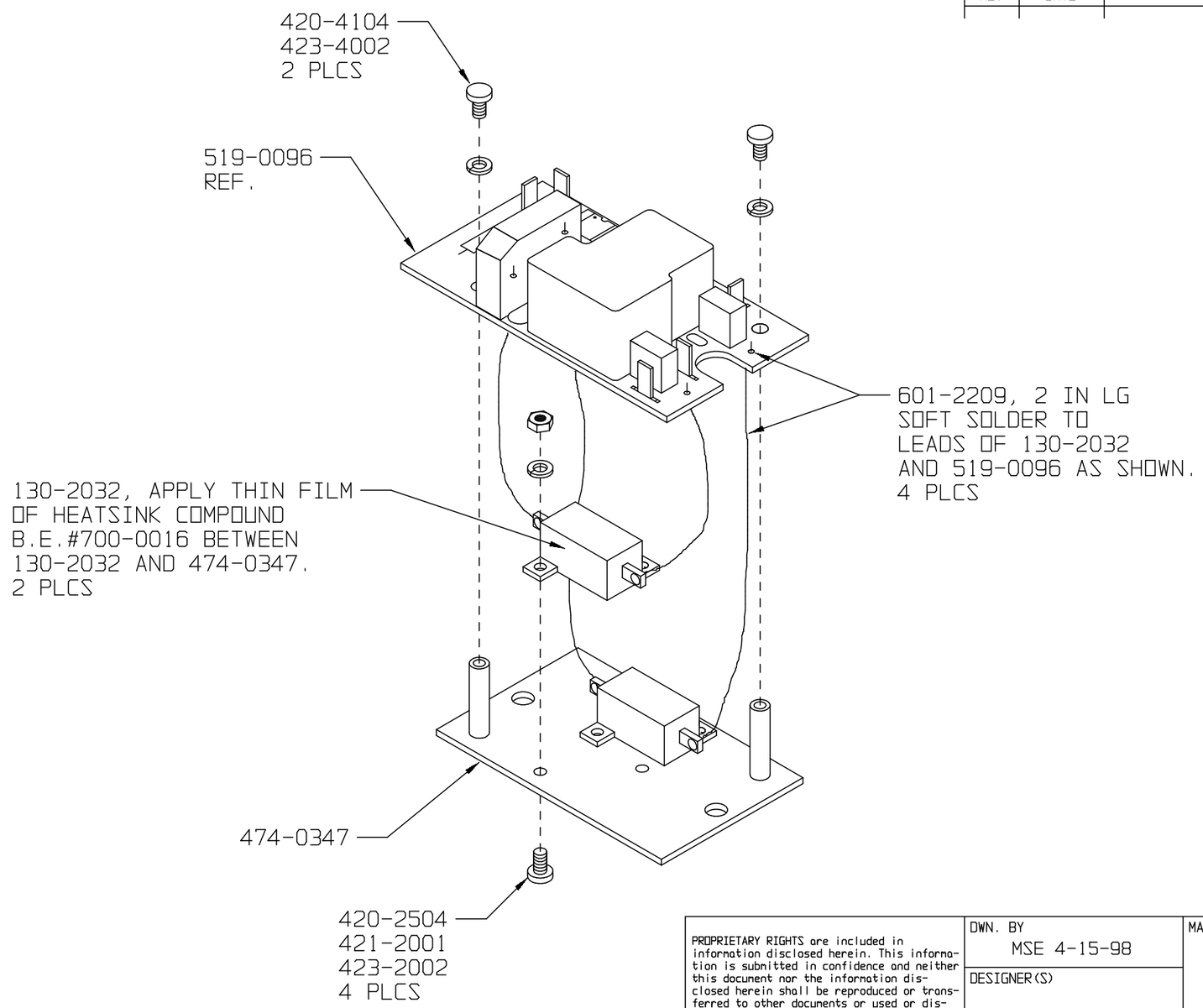

COPYRIGHT © 1998 BROADCAST ELECTRONICS, INC.

COPYRIGHT © 1998 BROADCAST ELECTRONICS, INC.

PROPRIETARY RIGHTS are included in information disclosed herein. This information is submitted in confidence and neither this document nor the information disclosed herein shall be reproduced or transferred to other documents or used or disclosed to others for manufacturing or for any other purpose except as specifically authorized in writing by BROADCAST ELECTRONICS, INC.

TOLERANCE (DECIMAL) U.O.S.
.x ± .030 .xxx ± .005
.xx ± .015 ANGLES ± 1°

DWN. BY MSE 4-15-98
DESIGNER(S)
PROJ. LEADER
MFG.

MATERIAL SEE BOM 919-0096, -001
FINISH SEE DWG RA592-0000
NEXT ASSY.

BROADCAST ELECTRONICS INC.
4100 N.24TH ST.,P.O.BOX 3606 QUINCY,IL 62305 217/224-9600
TELEX 250142 CABLE BROADCAST FAX 217/224-9607

TITLE ASSY, PCB OPTICALLY COUPLED RELAY (OCR)

TYPE	SIZE	DWG. NO.	REV
A	B	919-0096, -001	R

MODEL XMTRS SCALE 1/1 SHEET 2 OF 2

COPYRIGHT © 1998 BROADCAST ELECTRONICS, INC.

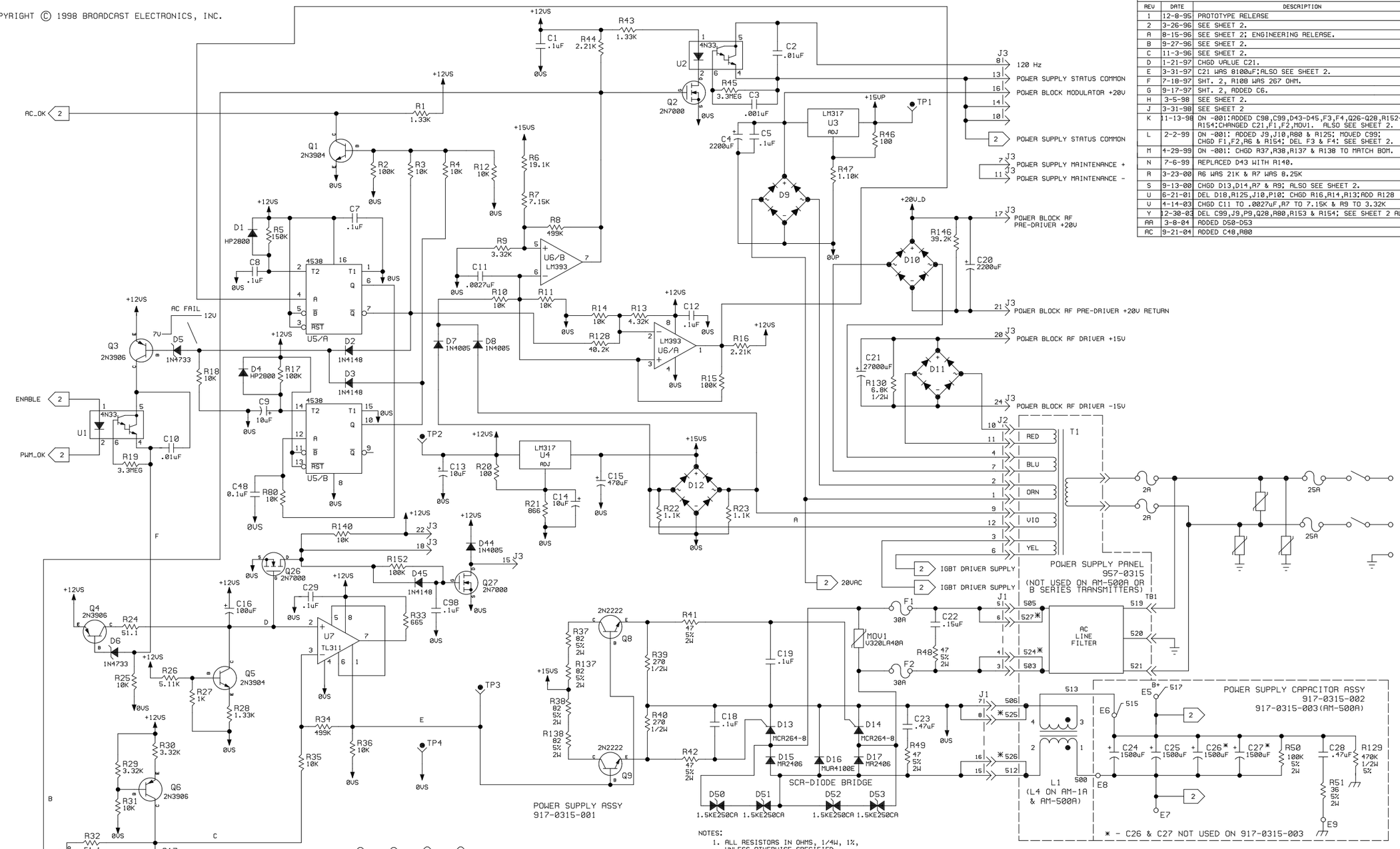

NOTES:

1. ALL RESISTORS IN OHMS, 1/4W, 1%, UNLESS OTHERWISE SPECIFIED.
2. LAST COMPONENT USED: C101,D53,E12,F2,J8,L5, MOV3,P8,Q27,R156,RT1,T1,TP14,U25.
3. COMPONENTS NOT USED: C51,C53-C55,C84,C97,C99,D20,D33,D35,D36, D18,D38,D43,E3,E4,L3,R125,R131-R133,R136,R139,R145,R153, R154,TP13,U18,U20.
4. * - INDICATES WIRES/COMPONENTS NOT USED ON AM-1A OR AM-500A.
5. SEE ASSEMBLY: AC917-0315-001 (POWER SUPPLY BD)
   AC917-0315-002 (CAPACITOR BD)
   AC917-0315-003 (CAPACITOR BD - AM-500A)
   AC917-0315-004 (CAPACITOR BD NO. 2)

REVISIONS

REV	DATE	DESCRIPTION	DFTSMN	ENGR	ECN
1	12-8-95	PROTOTYPE RELEASE	MH	JW	----
2	3-26-96	SEE SHEET 2.	MH	JW	----
A	8-15-96	SEE SHEET 2; ENGINEERING RELEASE.	MH	JW	----
B	9-27-96	SEE SHEET 2.	MH	JW	9716
C	11-3-96	SEE SHEET 2.	MH	JW	9719
D	1-21-97	CHGD VALUE C21.	KT	JW	9760
E	3-31-97	C21 WAS 8100uF;ALSO SEE SHEET 2.	MH	JW	9760A
F	7-18-97	SHT. 2, R108 WAS 267 OHM.	MSE	JW	9833
G	9-17-97	SHT. 2, ADDED C6.	KT	JW	9856
H	3-5-98	SEE SHEET 2.	MH	JW	9944
J	3-31-98	SEE SHEET 2	MSE	JW	9960
K	11-13-98	ON -001:ADDED C98,C99,D43-D45,F3,F4,Q26-Q28,R152-R154;CHANGED C21,F1,F2,MOV1. ALSO SEE SHEET 2.	MH	JW	10030
L	2-2-99	ON -001: ADDED J9,J10,R80 & R125; MOVED C99; CHGD F1,F2,R6 & R154; DEL F3 & F4; SEE SHEET 2.	KT	JW	10087
M	4-29-99	ON -001: CHGD R37,R38,R137 & R138 TO MATCH BOM.	KT	JW	10135
N	7-6-99	REPLACED D43 WITH R140.	KT	JW	10161
R	3-23-00	R6 WAS 21K & R7 WAS 8.25K	KT	JW	10275
S	9-13-00	CHGD D13,D14,R7 & R9; ALSO SEE SHEET 2.	MH	JW	10354
U	6-21-01	DEL D18,R125,J10,P10; CHGD R16,R14,R13;ADD R128	KT	JW	10465
V	4-14-03	CHGD C11 TO .0027uF,R7 TO 7.15K & R9 TO 3.32K	KT	JW	10958
Y	12-30-03	DEL C99,J9,P9,Q28,R80,R153 & R154; SEE SHEET 2 ALSO	KT	JW	11088
AA	3-8-04	ADDED D50-D53	KT	JW	11102
AC	9-21-04	ADDED C48,R80	KT		11323

COPYRIGHT © 1998 BROADCAST ELECTRONICS, INC.

PROPRIETARY RIGHTS are included in information disclosed herein. This information is submitted in confidence and neither this document nor the information disclosed herein shall be reproduced or transferred to other documents or used or disclosed to others for manufacturing or for any other purpose except as specifically authorized in writing by BROADCAST ELECTRONICS, INC.

TOLERANCE (DECIMAL) U.O.S.
.x ± .030 .xx ± .005
.xx ± .015 ANGLES ± 1°

DWN. BY 12-8-95 M. HAYDEN
CHKD
ME
PROJ. ENGR.
MFG.

MATERIAL SEE B/M 917-0315-001 917-0315-002/003 917-0315-004/005
FINISH
~~SEE DWG AA592-0000~~
NEXT ASSY.

BROADCAST ELECTRONICS INC.
4100 N. 24TH ST., P.O.BOX 3686 QUINCY, IL. 62305 217/224-9600
TELEX 250142 CABLE BROADCAST FAX 217/224-9607

TITLE SCHEMATIC POWER SUPPLY

TYPE	SIZE	DWG. NO.	REV
S	B	917-0315-001 thru 005	AC

MODEL AM-500A/2.5A/1A SCALE NONE SHEET 1 OF 2

COPYRIGHT © 1998 BROADCAST ELECTRONICS, INC.

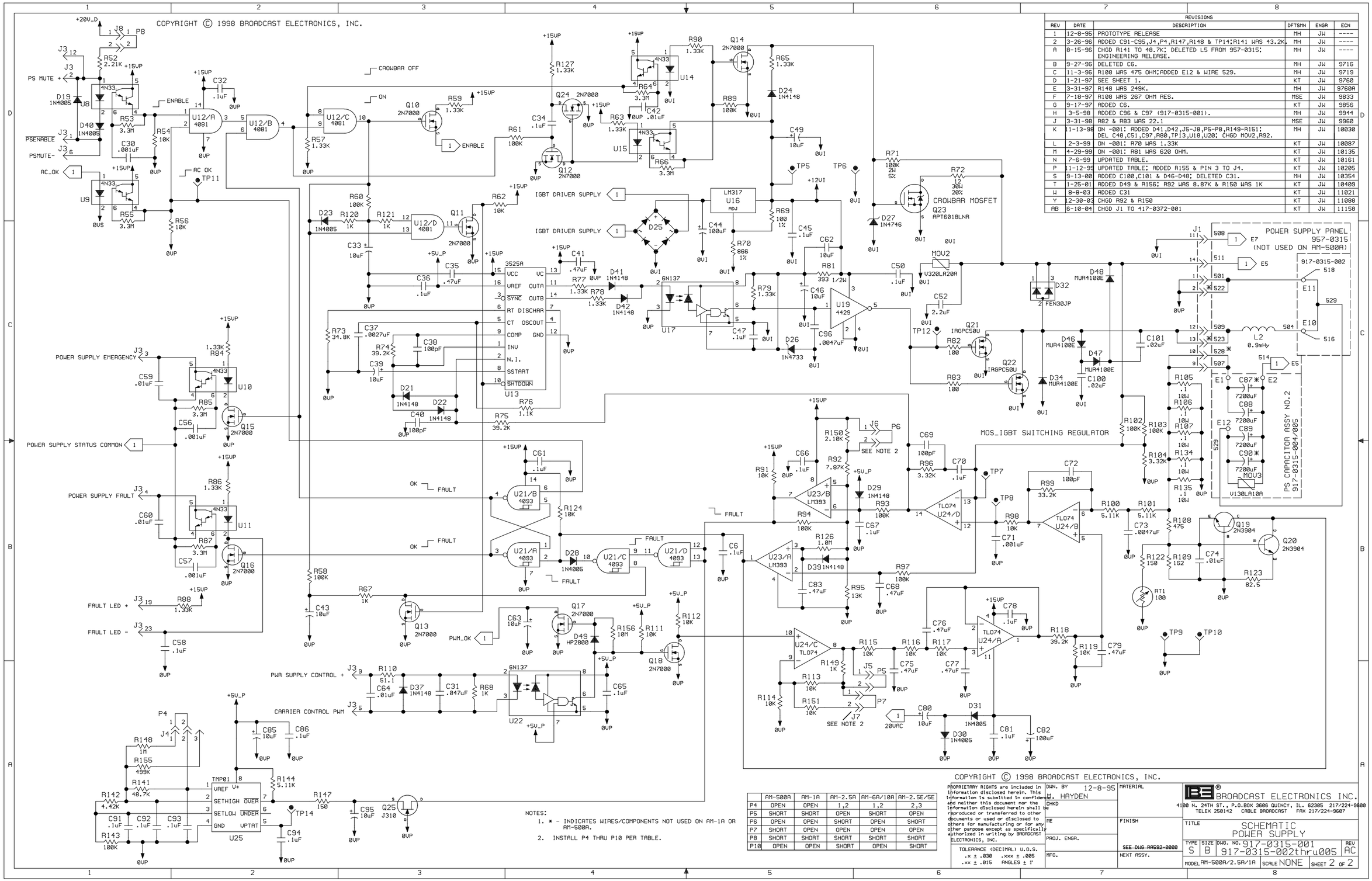

REV	DATE	DESCRIPTION	DFTSMN	ENGR	ECN
1	12-8-95	PROTOTYPE RELEASE	MH	JW	----
2	3-26-96	ADDED C91-C95,J4,P4,R147,R148 & TP14;R141 WAS 43.2K.	MH	JW	----
A	8-15-96	CHGD R141 TO 48.7K; DELETED L5 FROM 957-0315; ENGINEERING RELEASE.	MH	JW	----
B	9-27-96	DELETED C6.	MH	JW	9716
C	11-3-96	R108 WAS 475 OHM;ADDED E12 & WIRE 529.	MH	JW	9719
D	1-21-97	SEE SHEET 1.	KT	JW	9760
E	3-31-97	R148 WAS 249K.	MH	JW	9760A
F	7-18-97	R108 WAS 267 OHM RES.	MSE	JW	9833
G	9-17-97	ADDED C6.	KT	JW	9856
H	3-5-98	ADDED C96 & C97 (917-0315-001).	MH	JW	9944
J	3-31-98	R82 & R83 WAS 22.1	MSE	JW	9960
K	11-13-98	ON -001: ADDED D41,D42,J5-J8,P5-P8,R149-R151; DEL C48,C51,C97,R88,TP13,U18,U20; CHGD MOV2,R92.	MH	JW	10030
L	2-3-99	ON -001: R70 WAS 1.33K	KT	JW	10087
M	4-29-99	ON -001: R81 WAS 620 OHM.	KT	JW	10135
N	7-6-99	UPDATED TABLE.	KT	JW	10161
P	11-12-99	UPDATED TABLE; ADDED R155 & PIN 3 TO J4.	KT	JW	10205
S	9-13-00	ADDED C100,C101 & D46-D48; DELETED C31.	MH	JW	10354
T	1-25-01	ADDED D49 & R156; R92 WAS 8.87K & R150 WAS 1K	KT	JW	10409
W	8-8-03	ADDED C31	KT	JW	11021
Y	12-30-03	CHGD R92 & R150	KT	JW	11088
AB	6-10-04	CHGD J1 TO 417-0372-001	KT	JW	11158

	AM-500A	AM-1A	AM-2.5A	AM-6A/10A	AM-2.5E/5E
P4	OPEN	OPEN	1,2	1,2	2,3
P5	SHORT	SHORT	OPEN	SHORT	OPEN
P6	OPEN	OPEN	SHORT	OPEN	SHORT
P7	SHORT	OPEN	OPEN	OPEN	OPEN
P8	SHORT	SHORT	SHORT	SHORT	SHORT
P10	OPEN	OPEN	SHORT	OPEN	SHORT

NOTES:

1. * - INDICATES WIRES/COMPONENTS NOT USED ON AM-1A OR AM-500A.
2. INSTALL P4 THRU P10 PER TABLE.

COPYRIGHT © 1998 BROADCAST ELECTRONICS, INC.

PROPRIETARY RIGHTS are included in information disclosed herein. This information is submitted in confidence and neither this document nor the information disclosed herein shall be reproduced or transferred to other documents or used or disclosed to others for manufacturing or for any other purpose except as specifically authorized in writing by BROADCAST ELECTRONICS, INC.

TOLERANCE (DECIMAL) U.O.S.
.x ± .030 .xx ± .005
.xx ± .015 ANGLES ± 1°

DWN. BY J. HAYDEN 12-8-95
CHKD
ME
PROJ. ENGR.
MFG.

MATERIAL
FINISH
~~SEE DWG RA592-0000~~
NEXT ASSY.

BROADCAST ELECTRONICS INC.
4100 N. 24TH ST., P.O.BOX 3606 QUINCY, IL. 62305 217/224-9600
TELEX 250142 CABLE BROADCAST FAX 217/224-9607

TITLE SCHEMATIC POWER SUPPLY

TYPE S | SIZE B | DWG. NO. 917-0315-001 | REV AC
917-0315-002thru005

MODEL AM-500A/2.5A/1A | SCALE NONE | SHEET 2 OF 2

A	8-15-96	DELETED HARDWARE OFF OF U3; ENGINEERING RELEASE.	MH	JW	----
B	9-27-96	DELETED C6.	MH	JW	9716
C	11-3-96	CHGD VALUE OF R108(917-0315-001);ADDED E12(917-0315-005)	MH	JW	9719
D	11-21-97	CHGD VALUE OF C21;REPLACED F1 & F2.	KT	JW	9760
E	4-1-97	ON -001: CHGD VALUE OF C21 & R148; MOVED C15,C20,C21,C31,D7, D8,D10,D12,Q1,Q8,R1,R22,R23,R130 & U1.	MH	JW	9760A
F	4-2-97	ON -001: CHGD C16,C44 & C82 TO 023-1084 (SAME VALUE).	MH	JW	9784
G	7-18-97	R108 WAS 267 OHM, NOW 475 OHM.	MSE	JW	9833
H	9-17-97	ADDED C6.	KT	JW	9856
J	3-9-98	ON -001: ADDED C98,C97; MOVED C50,C51,R80,TP12,TP13 & U20	MH	JW	9944
K	3-31-98	R82 & R83 WERE 22.1 OHM.	MSE	JW	9960
L	11-13-98	ON -001: ADDED C98,C99,D41-D45,F3,F4,J5-J8,P5-P8,R149-R154, Q26-Q28; DELETED C48,C51,C97,R80,TP13,U18,U20; CHGD C21,F1, F2,MOV1,MOV2,R92; REMOVED LOWER RIGHT TAB.	MH	JW	9716
R	11-12-99	ADDED R155; CHGD J4 TO A THREE PIN HEADER.	KT	JW	10205
T	12-14-99	ADDED FUSE INFO. TO PCB.	KT	JW	10233
U	3-23-00	R6 WAS A 103-2105 & R7 WAS A 103-6344.	KT	JW	10275
V	9-22-00	ADDED C100,C101,D46-D48;DELETED C31;CHGD D13 & D14, R7 & R9; ALL ON 917-0315-001.	MH	JW	10354
W	1-25-01	ADDED D49 & R156; CHGD R92 & R150 ON -001	KT	JW	10409
Y	6-21-01	DEL R125,J10,P10,D18;ADDED R128;CHGD R13,R14,R15	KT	JW	10465
AA	8-26-02	UPDATED BOM TO MATCH ASSEMBLY	KT	JW	10718
AB	2-21-03	SEPERATED BOARDS	KT	JW	10880
AC	4-9-03	CORRECTED DETAIL "C" NOTES	KT	JW	10950
AD	4-14-03	CHGD C11,R7 & R9	KT	JW	10958
AE	8-8-03	ADD C31	KT	JW	11021
AF	1-23-04	DEL C99,J9,P9,Q28,R80,R153,R154; CHGD R92 & R150	KT	JW	11088
AG	3-9-04	ADDED D50-D53	KT	JW	11102
AH	6-10-04	CHGD J1 TO 417-0372-001	KT	JW	11158
AJ	9-28-05	ADDED C48 & R80	KT		11323

REVISIONS

REV	DATE	DESCRIPTION	DFTSMN	ENGR	ECN
M	2-4-99	ADDED J9,J10,P9,P10,R80 & R125;CHGD R6,R70,R154, F1 & F2; DEL F3 & F4.	KT	JW	10087
N	4-29-99	CHGD R81 TO 110-3933;R37,R38,R137,R138 TO MATCH BOM	KT	JW	10135
P	7-6-99	REPLACED D43 WITH R140 ON -001 & UPDATED TABLE.	KT	JW	10161

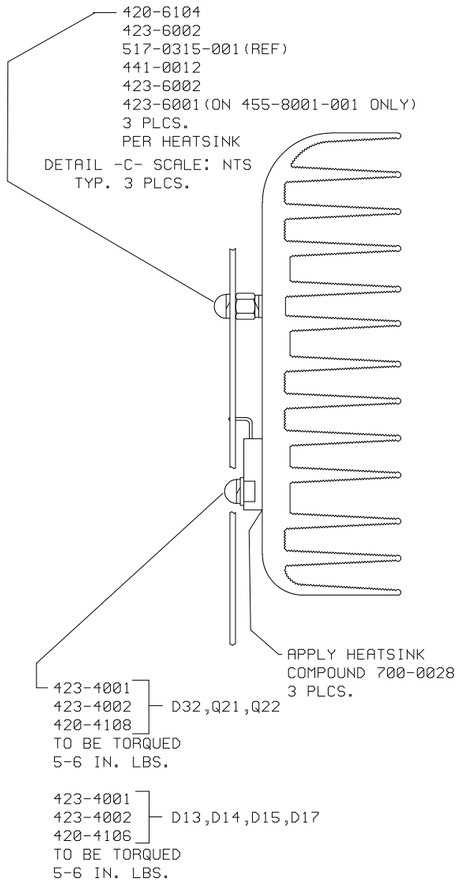

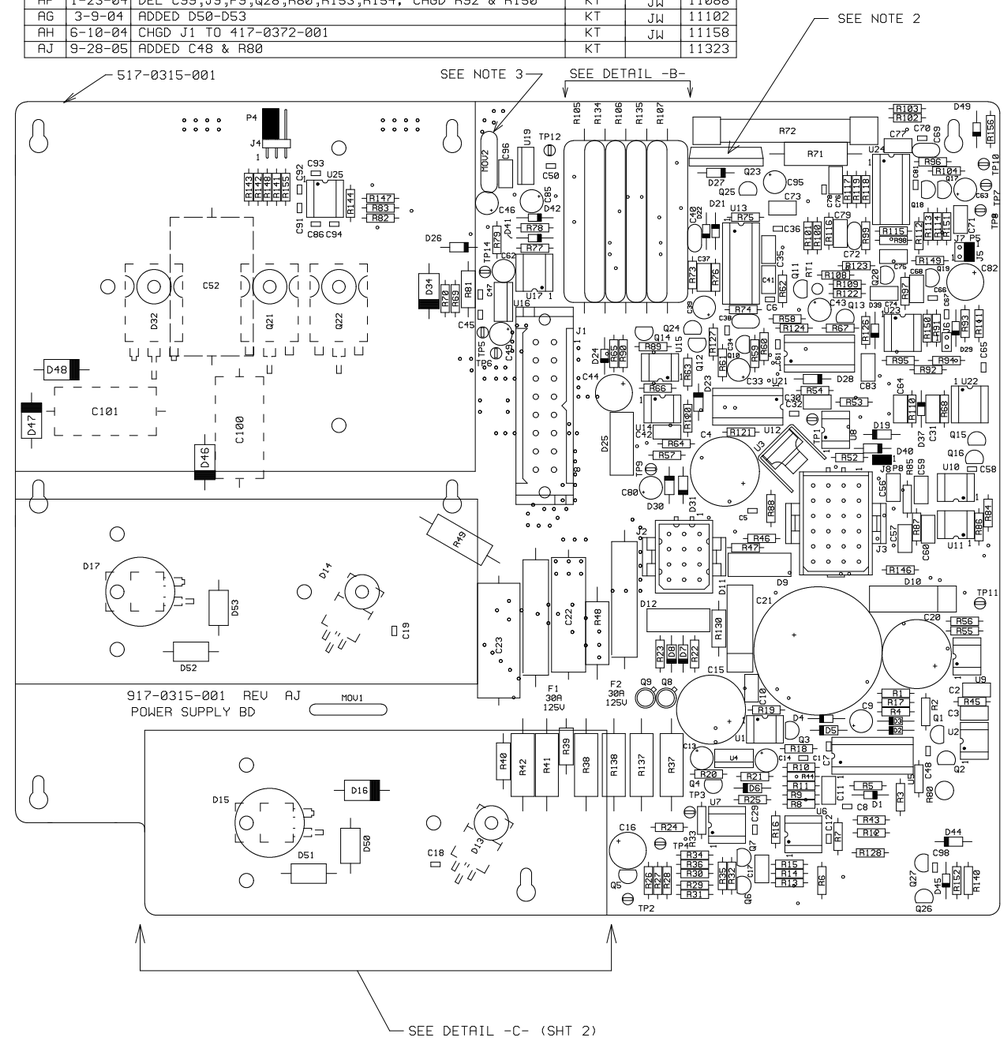

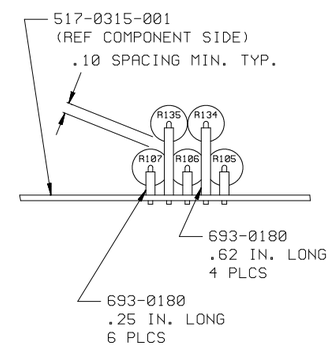

COPYRIGHT © 1996 BROADCAST ELECTRONICS, INC.

NOTES:

1. DASHED COMPONENT C52 TO BE MOUNTED FROM OPPOSITE SIDE.
2. COMPONENT Q23 TO BE SLEEVED WITH HEAT SHRINK TUBING P/N 690-0221.
3. COMPONENT MOV2 TO BE SLEEVED WITH HEAT SHRINK TUBING P/N 611-5000.
4. INSTALL P4 THRU P10 PER TABLE.

	AM-500A	AM-1A	AM-2.5A	AM-6A/10A	AM-2.5E/5E
P4	OPEN	OPEN	SHORT	SHORT	SHORT
P5	SHORT	SHORT	OPEN	SHORT	OPEN
P6	OPEN	OPEN	SHORT	OPEN	SHORT
P7	SHORT	OPEN	OPEN	OPEN	OPEN
P8	SHORT	SHORT	SHORT	SHORT	SHORT

PROPRIETARY RIGHTS are included in information disclosed herein. This information is submitted in confidence and neither this document nor the information disclosed herein shall be reproduced or transferred to other documents or used or disclosed to others for manufacturing or for any other purpose except as specifically authorized in writing by BROADCAST ELECTRONICS, INC.

TOLERANCE (DECIMAL) U.O.S.
.X ± .030 .XXX ± .005
.XX ± .015 ANGLES ± 1°

DWN. BY 12-12-95
M. HAYDEN
CHKD
ME
PROJ. ENGR.
MFG.

MATERIAL
SEE B/M
917-0315-001

FINISH
~~SEE DWG RA592-0000~~
NEXT ASSY.

BROADCAST ELECTRONICS INC.
4100 N.24TH ST. P.O.BOX 3606 QUINCY,IL. 62305 PH. 217/224-9600
TELEX 250142 CABLE BROADCAST FAX 217/224-9607

TITLE PCB ASSEMBLY POWER SUPPLY

TYPE	SIZE	DWG No.	REV
A	C	917-0315-001	AJ

MODEL AM-1A SCALE 1/1 SHEET 1 OF 1

REVISIONS					
REV	DATE	DESCRIPTION	DRAFTER	APPROVED	ECN
A	8-15-96	DELETED HARDWARE OFF OF U3; ENGINEERING RELEASE.	MH	JW	----
B	2-21-03	SEPERATED FROM 517-0315	KT		10880

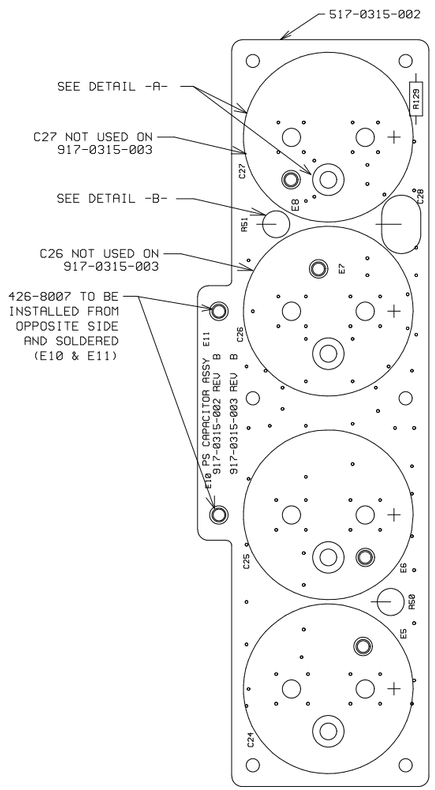

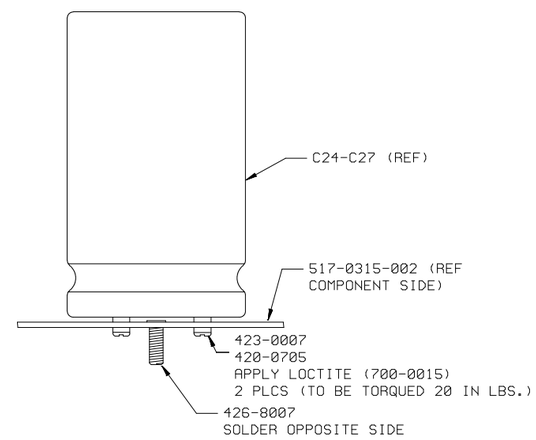

DETAIL -A- SCALE 1/1
FOR C27-E8,C26-E7,C25-E6 & C24-E5

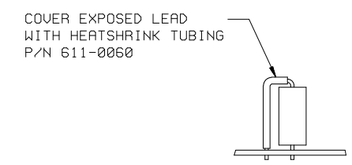

DETAIL -B- SCALE 1/1
FOR C28,R50 & R51

COPYRIGHT © 1996 BROADCAST ELECTRONICS, INC.

PROPRIETARY RIGHTS are included in information disclosed herein. This information is submitted in confidence and neither this document nor the information disclosed herein shall be reproduced or transferred to other documents or used or disclosed to others for manufacturing or for any other purpose except as specifically authorized in writing by BROADCAST ELECTRONICS, INC.

TOLERANCE (DECIMAL) U.O.S.
.X ± .030 .XXX ± .005
.XX ± .015 ANGLES ± 1°

DWN. BY 12-12-95
M. HAYDEN
CHKD
ME
PROJ. ENGR.
MFG.

MATERIAL
SEE B/M
917-0315-002/003
FINISH
~~SEE DWG RA592-0000~~
NEXT ASSY.

®
BROADCAST ELECTRONICS INC.
4100 N.24TH ST. P.O.BOX 3606 QUINCY,IL. 62305 PH. 217/224-9600
TELEX 250142 CABLE BROADCAST FAX 217/224-9607

TITLE PCB ASSEMBLY
CAPACITOR PCB

TYPE	SIZE	DWG No.	REV
A	C	917-0315-002	B

MODEL AM-1A SCALE 1/1 SHEET 1 OF 1

REVISIONS					
REV	DATE	DESCRIPTION	DFTSMN	ENGR	ECN
D	3-14-03	SEPERATED FROM 917-0315	KT		10880

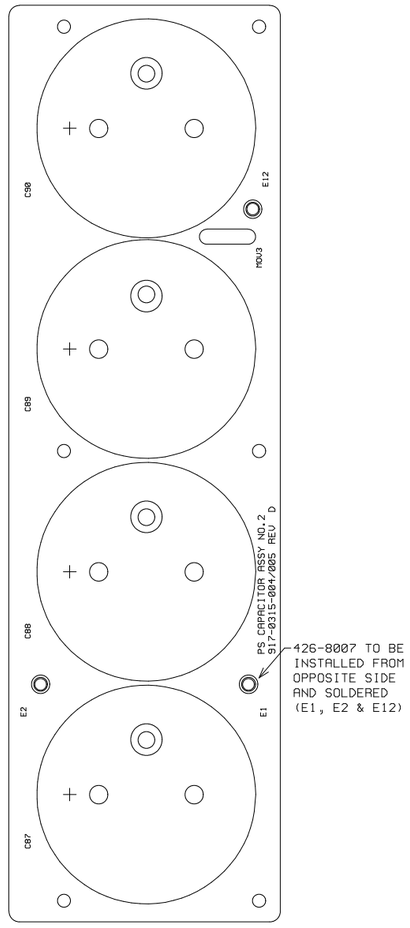

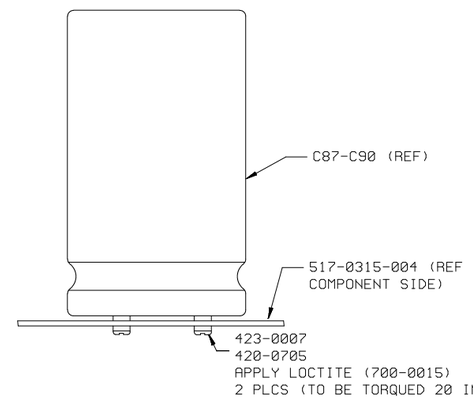

DETAIL -A- SCALE: NTS

COPYRIGHT © 1996 BROADCAST ELECTRONICS, INC.

COPYRIGHT © 1996 BROADCAST ELECTRONICS, INC.

PROPRIETARY RIGHTS are included in information disclosed herein. This information is submitted in confidence and neither this document nor the information disclosed herein shall be reproduced or transferred to other documents or used or disclosed to others for manufacturing or for any other purpose except as specifically authorized in writing by BROADCAST ELECTRONICS, INC.

TOLERANCE (DECIMAL) U.O.S.
.X ± .030 .XXX ± .005
.XX ± .015 ANGLES ± 1°

DWN. BY 12-12-95
M. HAYDEN
CHKD
ME
PROJ. ENGR.
MFG.

MATERIAL
SEE B/M
917-0315-004
917-0315-005

FINISH
~~SEE DWG RA592-0000~~
NEXT ASSY.

BROADCAST ELECTRONICS INC.
4100 N.24TH ST. P.O.BOX 3606 QUINCY,IL. 62305 PH. 217/224-9600
TELEX 250142 CABLE BROADCAST FAX 217/224-9607

TITLE PCB ASSEMBLY
POWER SUPPLY/CAPACITOR BDS

TYPE	SIZE	DWG No.	REV
A	C	917-0315-004/005	D

MODEL AM-1A SCALE 1/1 SHEET 1 OF 1

COPYRIGHT © 2003 BROADCAST ELECTRONICS, INC.

REVISIONS					
REV	DATE	DESCRIPTION	DFTSMN	ENGR	ECN
1	12-11-03	PROTOTYPE RELEASE	KT	JW	----
A	4-14-04	CHGD C14,C15 & C52; MODEL RELEASE	KT	JW	----
B	7-12-04	CHGD C15; MOVED J5-J8 & C50-C53	KT	JW	11184
C	4-3-08	ADD PIN 3 ON J1	JTB		11621

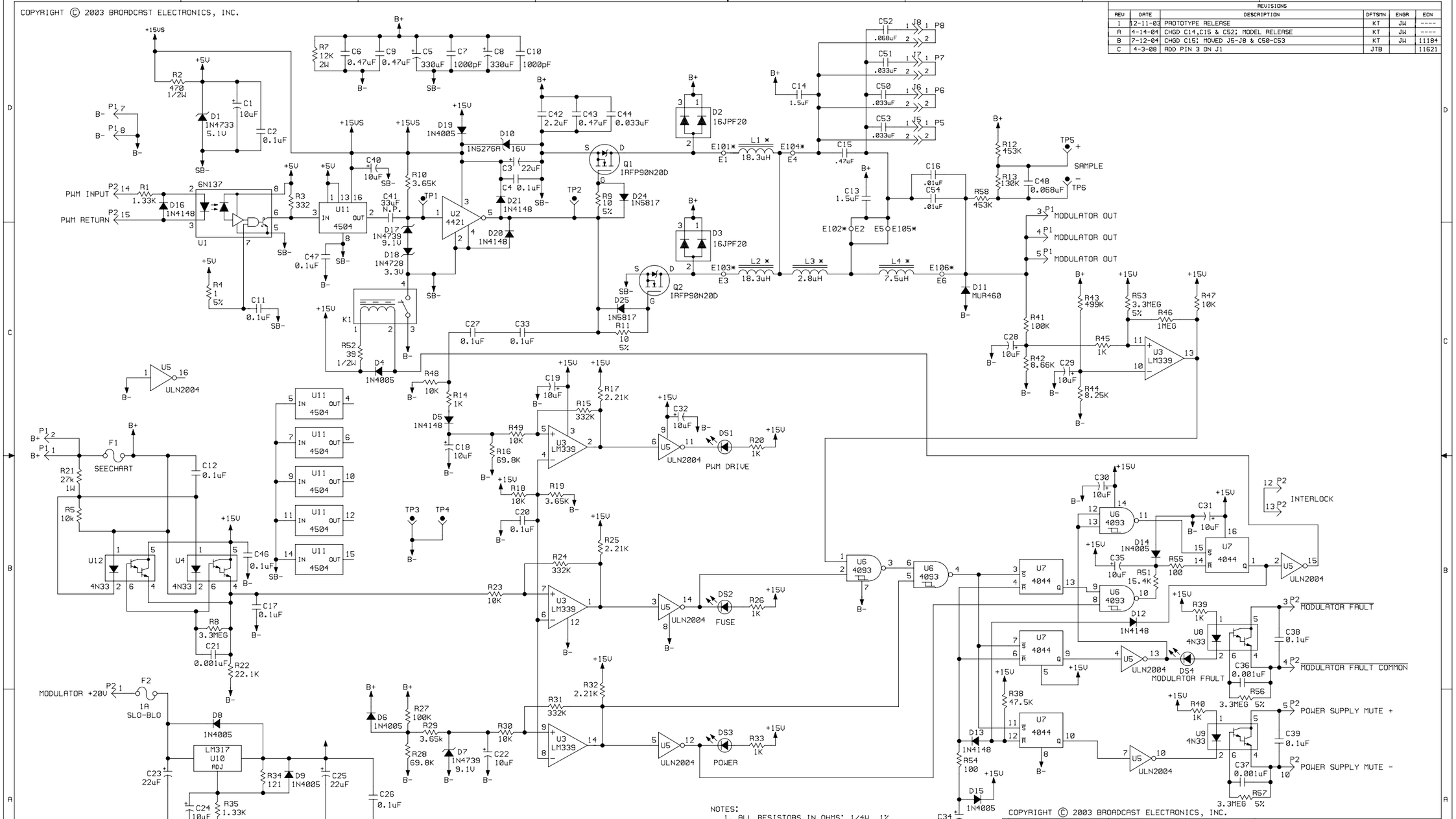

TYPICAL WAVEFORMS & VOLTAGES

NOTES:

1. ALL RESISTORS IN OHMS; 1/4W, 1% UNLESS OTHERWISE SPECIFIED.
2. LAST COMPONENT USED: C54, D25, DS4, E6, F2, J8, K1, L4, P8, Q2, R58, TP6, U12
3. COMPONENTS NOT USED: R6,R36,R37,R50,R59,D22,D23 J3,J4,P3,P4,C49
4. SEE ASSEMBLY: AD 917-0302-100 & AB 917-0302-103.
5. * INDICATES PARTS USED ON 917-0302-103

COPYRIGHT © 2003 BROADCAST ELECTRONICS, INC.

PROPRIETARY RIGHTS are included in information disclosed herein. This information is submitted in confidence and neither this document nor the information disclosed herein shall be reproduced or transferred to other documents or used or disclosed to others for manufacturing or for any other purpose except as specifically authorized in writing by BROADCAST ELECTRONICS, INC.

TOLERANCE (DECIMAL) U.O.S.
.x ± .030 .xxx ± .005
.xx ± .015 ANGLES ± 1°

DWN. BY KT 12-11-03
DESIGNER(S)
PROJ. LEADER JW 12-11-03
MFG.

MATERIAL SEE BOMS 917-0302-100 917-0302-103
FINISH
NEXT ASSY.

BROADCAST ELECTRONICS INC.
4100 N. 24TH ST., P.O.BOX 3686 QUINCY, IL. 62305
217/224-9600 FAX 217/224-9607

TITLE SCHEMATIC MODULATOR BD

TYPE	SIZE	DWG. NO.	REV
		917-0302-100/103	C

MODEL AM-1A SCALE SHEET 1 OF 1

COPYRIGHT © 2003 BROADCAST ELECTRONICS, INC.

REVISIONS					
REV	DATE	DESCRIPTION	DRAFTER	APPROVED	ECN
1	12-12-03	PROTOTYPE RELEASE.	KT		----
A	4-14-04	CHGD C13,C14,C15,C52; MODEL RELEASE	KT	JW	----
B	7-12-04	CHGD C15; MOVED J5-J8 & C50-C53	KT	JW	11184
C	12-29-04	DELETED NOTE	KT	JW	11217
D	4-3-08	ADD PIN3 ON J1	JTB		11621

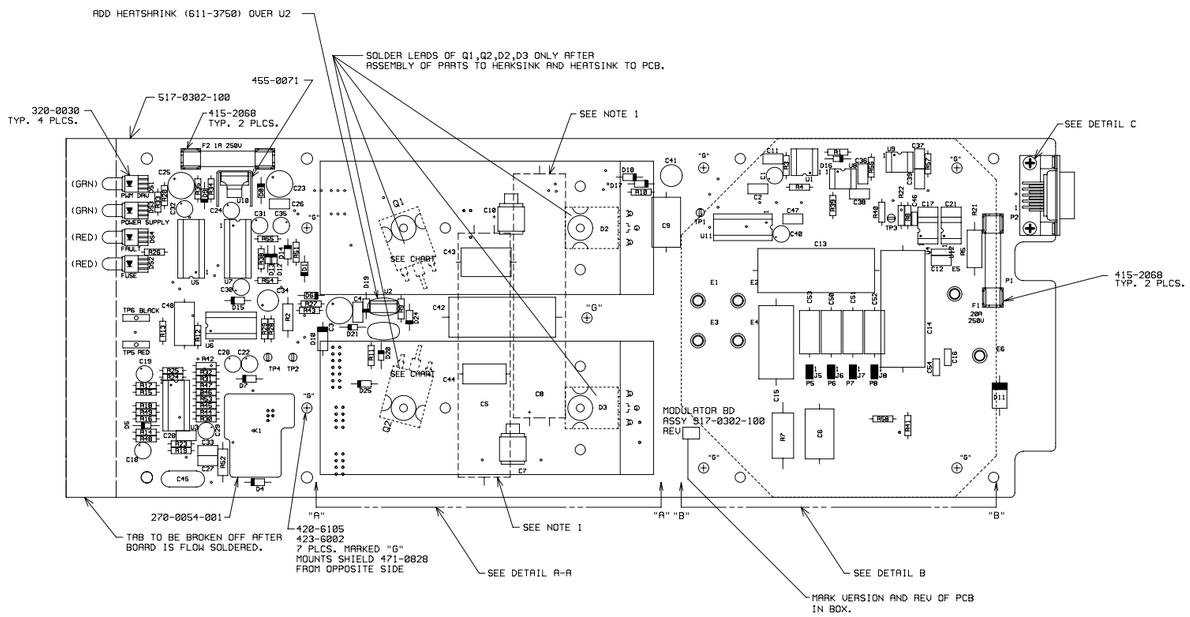

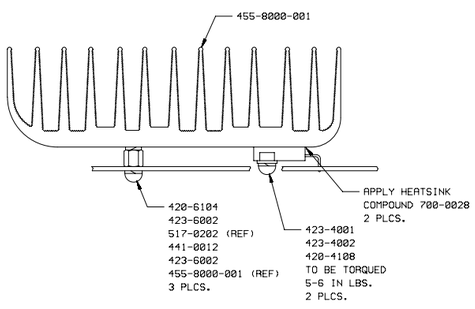

DETAIL A-A SCALE 1/1
TYP. 2 PLCS.

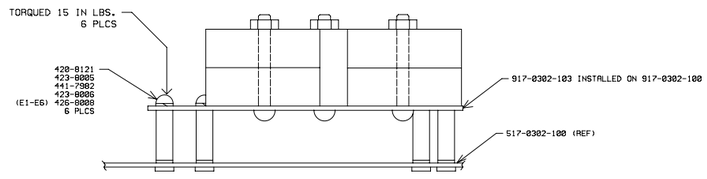

DETAIL B

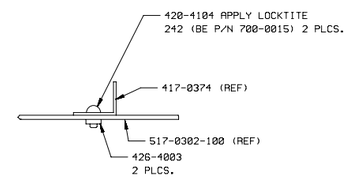

DETAIL "C" SCALE 1/1

NOTES:
1) DASHED COMPONENTS TO BE MOUNTED ON OPPOSITE SIDE.
2) C13 & C14 MOUNT FLAT ON BOARD; C42 MOUNTS ON ITS EDGE.
3) SEE SCHEMATIC SB917-0302-100.
4) SOCKETS FOR U1,U3-U9,U11 & U12 ARE INSTALLED.
5) FUSE CLIPS ARE INSTALLED.

COPYRIGHT © 2003 BROADCAST ELECTRONICS, INC.

PROPRIETARY RIGHTS are included in information disclosed herein. This information is submitted in confidence and neither this document nor the information disclosed herein shall be reproduced or transferred to other documents or shall be disclosed to others for manufacturing or for any other purpose except as specifically authorized in writing by BROADCAST ELECTRONICS, INC.

TOLERANCE (DECIMAL) U.O.S.
.X ± .030 .XXX ± .005
.XX ± .015 ANGLES ± 1°

DWN. BY KT 12-12-03
DESIGNER(S)
PROJ. LEADER
MFG.

MATERIAL SEE B/M
917-0302-100
FINISH
NEXT ASSY.

BROADCAST ELECTRONICS INC.
4100 N. 24TH ST. P.O.BOX 3606 QUINCY,IL. 62305
217/224-9600 FAX 217/224-9687

TITLE PCB ASSEMBLY MODULATOR BD

TYPE	SIZE	DWG No.	REV
A	D	917-0302-100	D

MODEL AM-1A SCALE 1/1 SHEET 1 OF 1

REVISIONS					
REV	DATE	DESCRIPTION	DRAFTER	APPROVED	ECN
1	12–12–03	PROTOTYPE RELEASE	KT		----
A	4–14–04	MODEL RELEASE WITHOUT CHANGE	KT		----
B	6–16–06	MOV'D L3 LEAD	JTB		11480

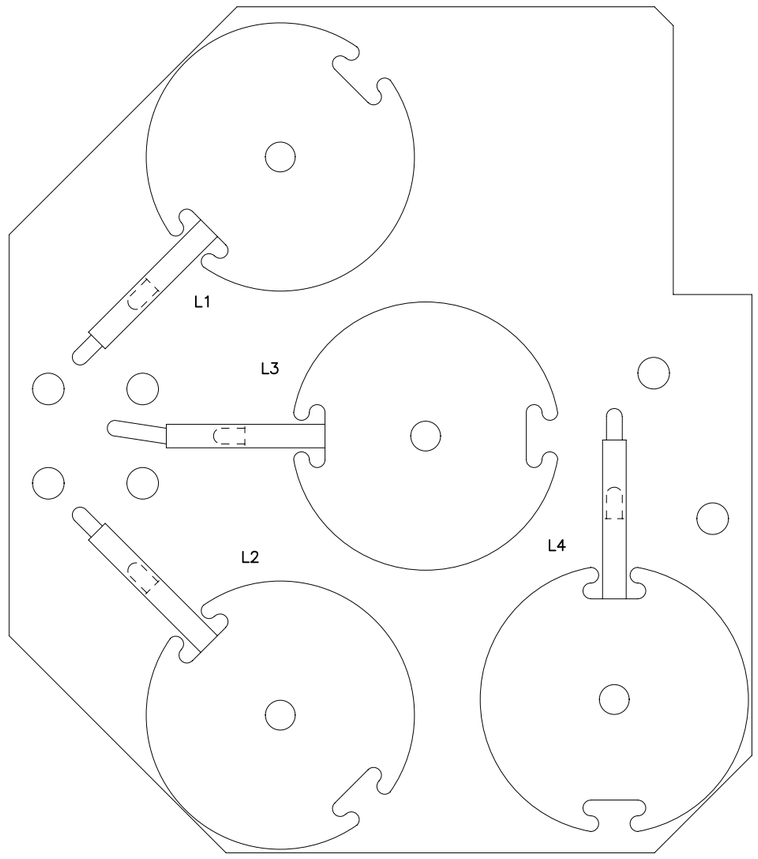

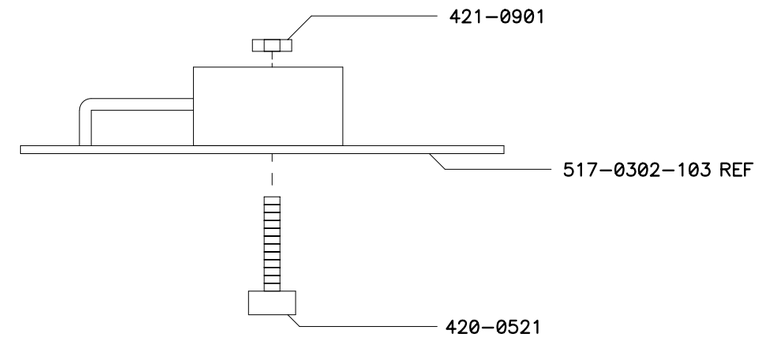

COPYRIGHT © 2003 BROADCAST ELECTRONICS, INC.

PROPRIETARY RIGHTS are included in information disclosed herein. This information is submitted in confidence and neither this document nor the information disclosed herein shall be reproduced or transferred to other documents or used or disclosed to others for manufacturing or for any other purpose except as specifically authorized in writing by BROADCAST ELECTRONICS, INC.

TOLERANCE (DECIMAL) U.O.S.

.X + .030 .XXX + .005

.XX + .015 ANGLES + 1 °

DWN. BY KT 12–12–03

DESIGNER(S)

PROJ. LEADER

MFG.

MATERIAL SEE BOMS 917–0302–103

FINISH

NEXT ASSY.

BROADCAST ELECTRONICS INC.
4100 N. 24TH ST. P.O.BOX 3606 QUINCY,IL. 62305
217/224–9600 FAX 217/224–9607

TITLE MODULATAR COIL PCB

TYPE	SIZE	DWG No.	REV
A	B	917–0302–103	B

MODEL NNNN SCALE 1/1 SHEET 1 OF 1

REVISIONS					
REV	DATE	DESCRIPTION	DRAFTER	APPROVED	ECN
A	4-10-01	RELEASED PER ECN	KT	JW	10421
B	10-1-02	CHGD SOLDERMASK	KT	JW	10793

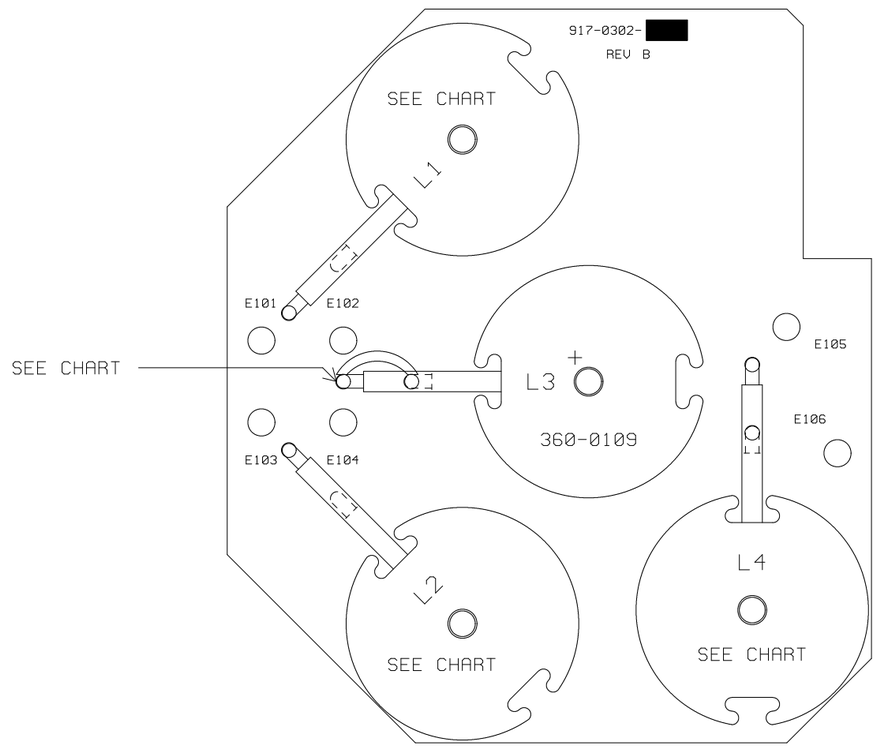

PART	BOARDS	
	0302-003	302-004
L1	360-0108	360-0098-001
L2	360-0108	360-0098-001
L3	360-0109	640-1400
L4	360-0110	360-0097-001

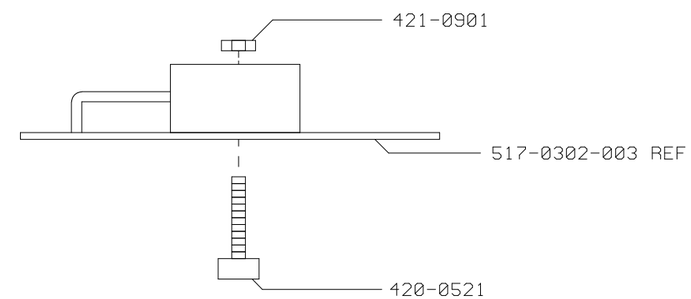

COPYRIGHT © 2001 BROADCAST ELECTRONICS, INC.

PROPRIETARY RIGHTS are included in information disclosed herein. This information is submitted in confidence and neither this document nor the information disclosed herein shall be reproduced or transferred to other documents or used or disclosed to others for manufacturing or for any other purpose except as specifically authorized in writing by BROADCAST ELECTRONICS, INC.

TOLERANCE (DECIMAL) U.O.S.
.X ± .030 .XXX ± .005
.XX ± .015 ANGLES + 1°

DWN. BY KT 4-10-01
DESIGNER(S)
PROJ. LEADER
MFG.

MATERIAL
SEE BOMS
917-0302-003
917-0302-004
FINISH
NEXT ASSY.

BROADCAST ELECTRONICS INC.
4100 N. 24TH ST. P.O.BOX 3606 QUINCY,IL. 62305
217/224-9600 FAX 217/224-9607

TITLE
MODULATAR COIL PCB

TYPE	SIZE	DWG No.	REV
A	B	917-0302-003/004	B

MODEL NNNN SCALE 1/1 SHEET 1 OF 1

REVISIONS				
REV	DATE	DESCRIPTION	DRAFTER	ECN
A	6-22-10	RELEASE TO PRODUCTION	JTB	

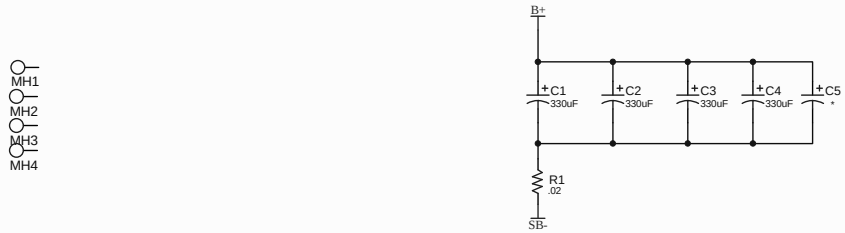

DESIGNER JTB 5-23-09	MATERIAL -SEE BOM	BROADCAST ELECTRONICS INC. 4100 N. 24TH ST., P.O.BOX 3606 QUINCY, IL. 62305 217/224-9600 FAX 217/224-9607	
ENGINEER KM	FINISH 917-0302-105		
PROPRIETARY RIGHTS are included in information disclosed herein. This information is submitted in confidence and neither this document nor the information disclosed herein shall be reproduced or transferred to other documents or used or disclosed to others for manufacturing or for any other purpose except as specifically authorized in writing by BROADCAST ELECTRONICS, INC.	TOLERANCE U.O.S. .x + .030 .xx + .015 .xxx + .005 ANGLES + 1	TITLE CAP BOARD	
		TYPE S / SIZE B / DWG. NO. 917-0302-105	REV A
		MODEL AM / SCALE NONE	SHEET 1 OF 1

REVISIONS					
REV	DATE	DESCRIPTION	DRAFTER	APPROVED	ECN
1	4–10–10	PRE RELEASE	JTB	KM	----
A	6–22–10	RELEASE TO PRODUCTION	JTB		----

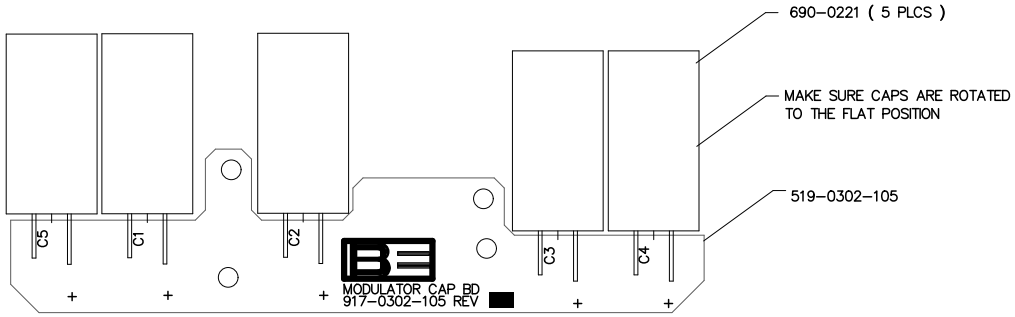

COMPONENT SIDE SILKSCREEN 517–0302–105 REV A

COPYRIGHT © 2010 BROADCAST ELECTRONICS, INC.

PROPRIETARY RIGHTS are included in information disclosed herein. This information is submitted in confidence and neither this document nor the information disclosed herein shall be reproduced or transferred to other documents or used or disclosed to others for manufacturing or for any other purpose except as specifically authorized in writing by BROADCAST ELECTRONICS, INC.

TOLERANCE (DECIMAL) U.O.S.
.X + .030 .XXX + .005
.XX + .015 ANGLES + 1 °

DWN. BY JTB 4–8–10
DESIGNER(S) JTB 4–8–10
PROJ. LEADER
MFG.
MATERIAL
FINISH
NEXT ASSY.

BROADCAST ELECTRONICS INC.
4100 N.24TH ST. P.O.BOX 3606 QUINCY,IL. 62305 PH. 217/224–9600
TELEX 250142 CABLE BROADCAST FAX 217/224–9607

TITLE PCB ASSEMBLY MODULATOR CAP

TYPE	SIZE	DWG No.	REV
A		917–0302–105	A

MODEL AM SCALE 1/1 SHEET 1 OF 2

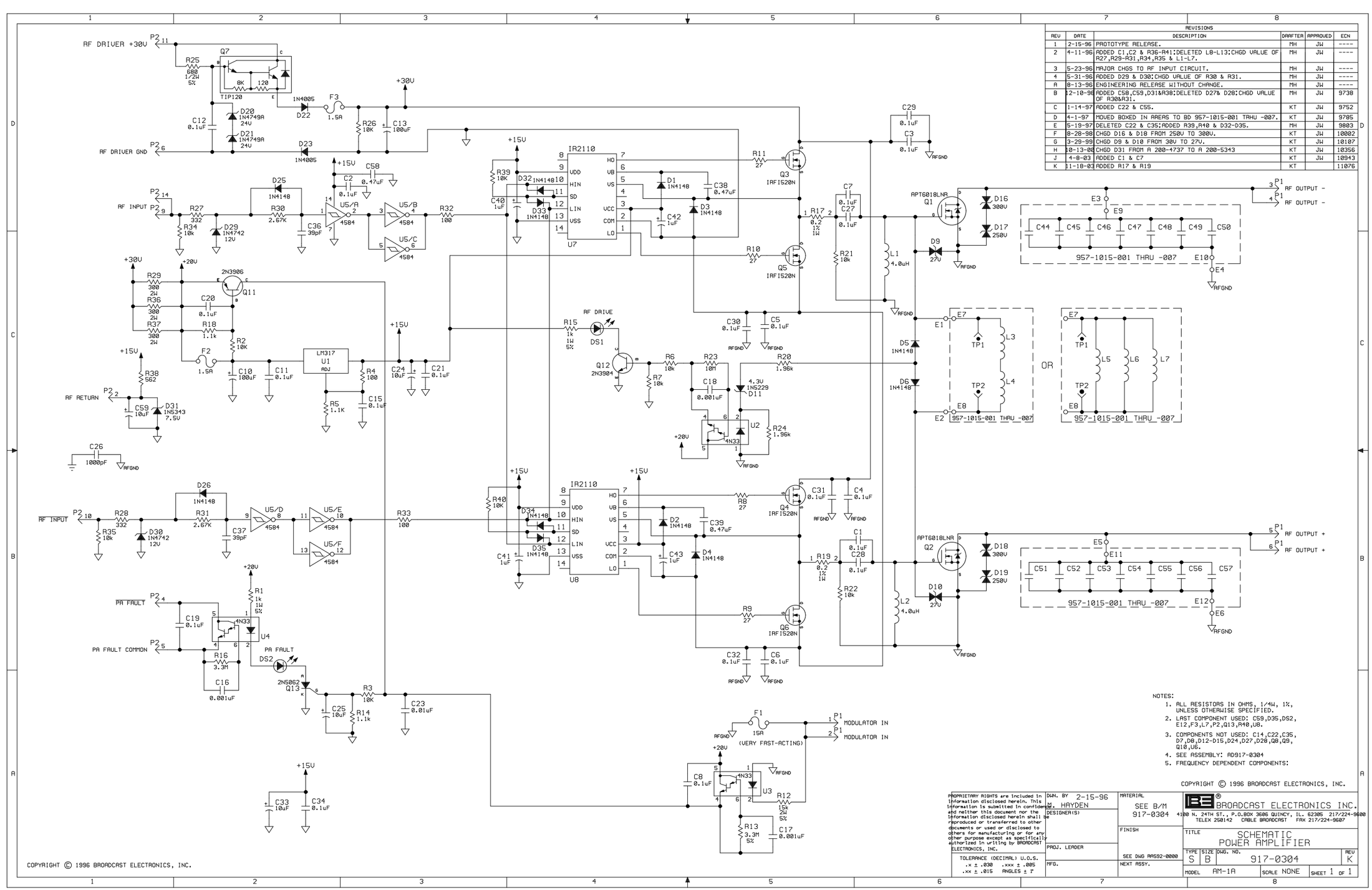

REVISIONS					
REV	DATE	DESCRIPTION	DRAFTER	APPROVED	ECN
1	2-15-96	PROTOTYPE RELEASE.	MH	JW	----
2	4-11-96	ADDED C1,C2 & R36-R41;DELETED L8-L13;CHGD VALUE OF R27,R29-R31,R34,R35 & L1-L7.	MH	JW	----
3	5-23-96	MAJOR CHGS TO RF INPUT CIRCUIT.	MH	JW	----
4	5-31-96	ADDED D29 & D30;CHGD VALUE OF R30 & R31.	MH	JW	----
A	8-13-96	ENGINEERING RELEASE WITHOUT CHANGE.	MH	JW	----
B	12-10-96	ADDED C58,C59,D31&R38;DELETED D27& D28;CHGD VALUE OF R30&R31.	MH	JW	9738
C	1-14-97	ADDED C22 & C55.	KT	JW	9752
D	4-1-97	MOVED BOXED IN AREAS TO BD 957-1015-001 THRU -007.	KT	JW	9785
E	5-19-97	DELETED C22 & C35;ADDED R39,R40 & D32-D35.	MH	JW	9803
F	8-28-98	CHGD D16 & D18 FROM 250V TO 300V.	KT	JW	10002
G	3-29-99	CHGD D9 & D10 FROM 30V TO 27V.	KT	JW	10107
H	10-13-00	CHGD D31 FROM A 200-4737 TO A 200-5343	KT	JW	10356
J	4-8-03	ADDED C1 & C7	KT	JW	10943
K	11-18-03	ADDED R17 & R19	KT		11076

NOTES:

1. ALL RESISTORS IN OHMS, 1/4W, 1%, UNLESS OTHERWISE SPECIFIED.
2. LAST COMPONENT USED: C59,D35,DS2, E12,F3,L7,P2,Q13,R40,U8.
3. COMPONENTS NOT USED: C14,C22,C35, D7,D8,D12-D15,D24,D27,D28,Q8,Q9, Q10,U6.
4. SEE ASSEMBLY: AD917-0304
5. FREQUENCY DEPENDENT COMPONENTS:

COPYRIGHT © 1996 BROADCAST ELECTRONICS, INC.

PROPRIETARY RIGHTS are included in information disclosed herein. This information is submitted in confidence and neither this document nor the information disclosed herein shall be reproduced or transferred to other documents or used or disclosed to others for manufacturing or for any other purpose except as specifically authorized in writing by BROADCAST ELECTRONICS, INC.

TOLERANCE (DECIMAL) U.O.S.
.x ± .030 .xxx ± .005
.xx ± .015 ANGLES ± 1°

DWN. BY 2-15-96 J. HAYDEN
DESIGNER(S)
PROJ. LEADER
MFG.

MATERIAL SEE B/M 917-0304
FINISH
SEE DWG AA592-0000
NEXT ASSY.

BROADCAST ELECTRONICS INC.
4100 N. 24TH ST., P.O.BOX 3606 QUINCY, IL. 62305 217/224-9600
TELEX 250142 CABLE BROADCAST FAX 217/224-9607

TITLE SCHEMATIC POWER AMPLIFIER

TYPE	SIZE	DWG. NO.	REV
S	B	917-0304	K

MODEL AM-1A SCALE NONE SHEET 1 OF 1

COPYRIGHT © 1996 BROADCAST ELECTRONICS, INC.

REVISIONS

REV	DATE	DESCRIPTION	DRAFTER	APPROVED	ECN
1	3-21-96	PROTOTYPE RELEASE.	MH	JW	----
2	6-3-96	MAJOR CHANGES TO RF INPUT CIRCUIT.	MH	JW	----
3	7-21-96	MOVED C15,C36,D25,R4,R27,R30,R34 & MOUNTING HOLES ON INDUCTOR BOARD.	MH	JW	----
A	8-13-96	UPDATED ASSEMBLY NOTES; ENGINEERING RELEASE.	MH	JW	----
B	12-11-96	ADDED C58,C59,D31& R38; DELETED D27&D28; CHANGED VALUE OF R30 & R31; DELETED RIGHT BREAKAWAY TAB.	MH	JW	9738
C	1-14-97	ADDED C22 & C35; MOVED D3.	KT	JW	9752
D	3-31-97	DELETED CAPACITOR AND INDUCTOR BOARDS.	KT	JW	9785
E	5-21-97	DELETED C22 & C35;ADDED R39,R40 & D32-D35.	MH	JW	9803
F	9-19-97	ADDED NOTES & DETAILS C & D.	KT	JW	9860
G	8-28-98	CHGD D16 & D18 TO 206-0300.	KT	JW	10002
H	3-29-99	CHGD D9 & D10 TO 206-0027.	KT	JW	10107
J	12-13-99	ADDED FUSE SIZES TO PCB.	KT	JW	10233
K	10-13-00	CHGD D31 FROM A 200-4737 TO A 200-5343	KT	JW	10356
L	1-29-01	ADDED -002	KT	JW	10408
M	9-17-02	ADDED TORQUE TO DETAILS C & D	KT	JW	10775
N	4-14-03	ADDED C1 & C7	KT	JW	10943
P	11-18-03	ADDED R17 & R19	KT	JW	11076
R	2-9-05	REMOVED -002 ASSEMBLY	KT	JW	11239
T	3-2-05	ADDED 0.500 INCH BREAKAWAY TAB	KT	JW	11263
U	8-15-05	MOVED L1 & L2 TO BOTTOM OF BOARD	KT	JW	11318
W	4-19-07	CHG'D QTY 4 (420-4108) TO (420-4106)	JTB		11514

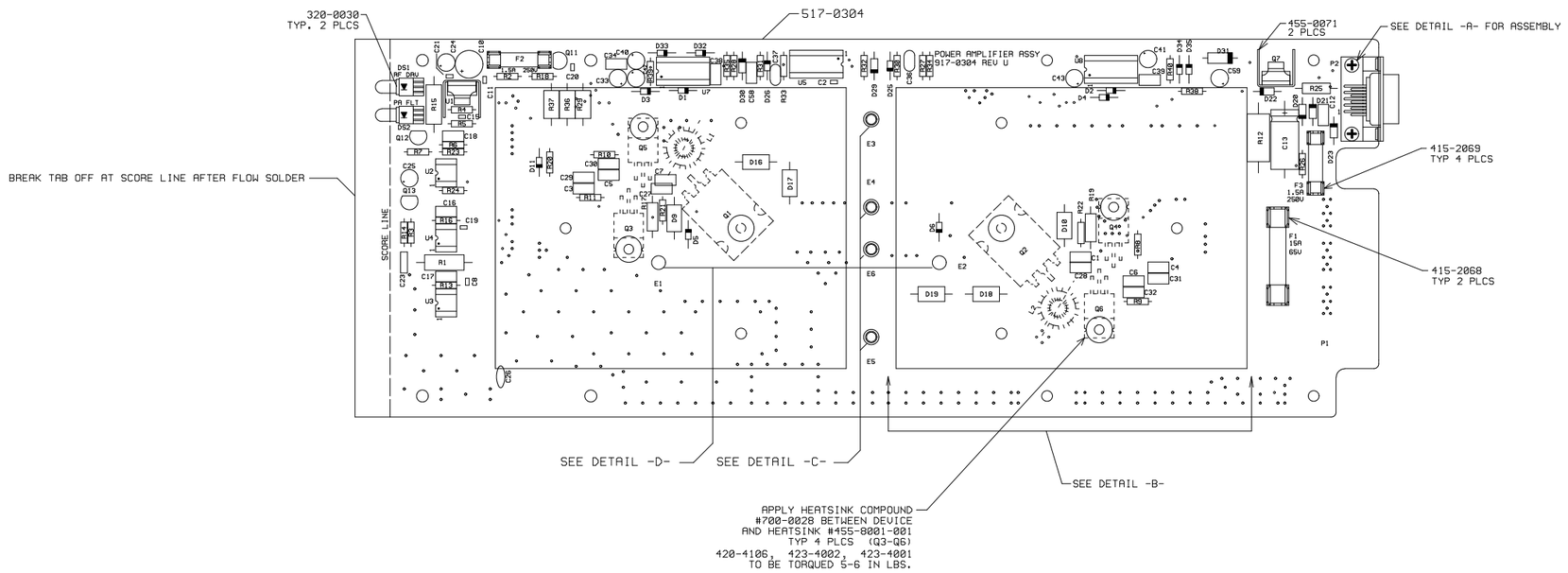

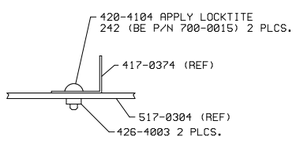

DETAIL -A- SCALE 1/1

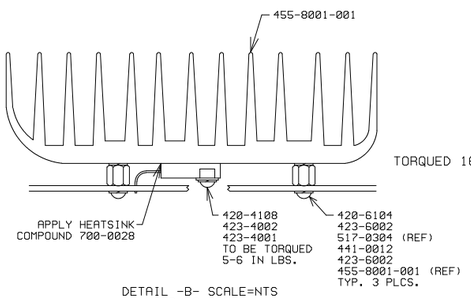

DETAIL -B- SCALE=NTS
TYP. 2 PLCS.
(Q1)(Q2)

DETAIL -C- SCALE 1/1
TYP. 4 PLCS.

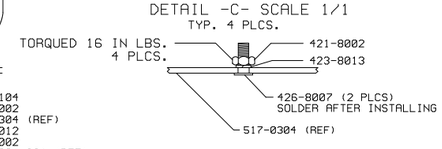

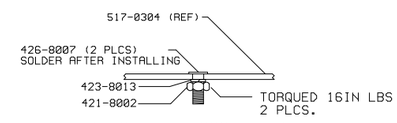

DETAIL -D- SCALE 1/1
TYP. 2 PLCS.

NOTES:

1. SEE SCHEMATIC SB917-0304.

COPYRIGHT © 1996 BROADCAST ELECTRONICS, INC.

PROPRIETARY RIGHTS are included in information disclosed herein. This information is submitted in confidence and neither this document nor the information disclosed herein shall be reproduced or transferred to other documents or used or disclosed to others for manufacturing or for any other purpose except as specifically authorized in writing by BROADCAST ELECTRONICS, INC.

TOLERANCE (DECIMAL) U.O.S.
.X ± .030 .XXX ± .005
.XX ± .015 ANGLES ± 1°

DWN. BY 3-21-96 M. HAYDEN
DESIGNER(S)
PROJ. LEADER JW 8-16-96
MFG.

MATERIAL SEE B/M 917-0304
FINISH --------
NEXT ASSY.

BROADCAST ELECTRONICS INC.
4100 N. 24TH ST. P.O.BOX 3686 QUINCY,IL. 62305
217/224-9600 FAX 217/224-9607

TITLE PCB ASSEMBLY POWER AMP BD

TYPE	SIZE	DWG No.	REV
A	D	917-0304	W

MODEL AM-1A SCALE 1/1 SHEET 1 OF 1

COPYRIGHT © 1996 BROADCAST ELECTRONICS, INC.

REVISIONS					
REV	DATE	DESCRIPTION	DFTSMN	ENGR	ECN
1	11-25-95	PROTOTYPE RELEASE	MH	JW	----
A	8-15-96	ENGINEERING RELEASE WITHOUT CHANGE.	MH		----

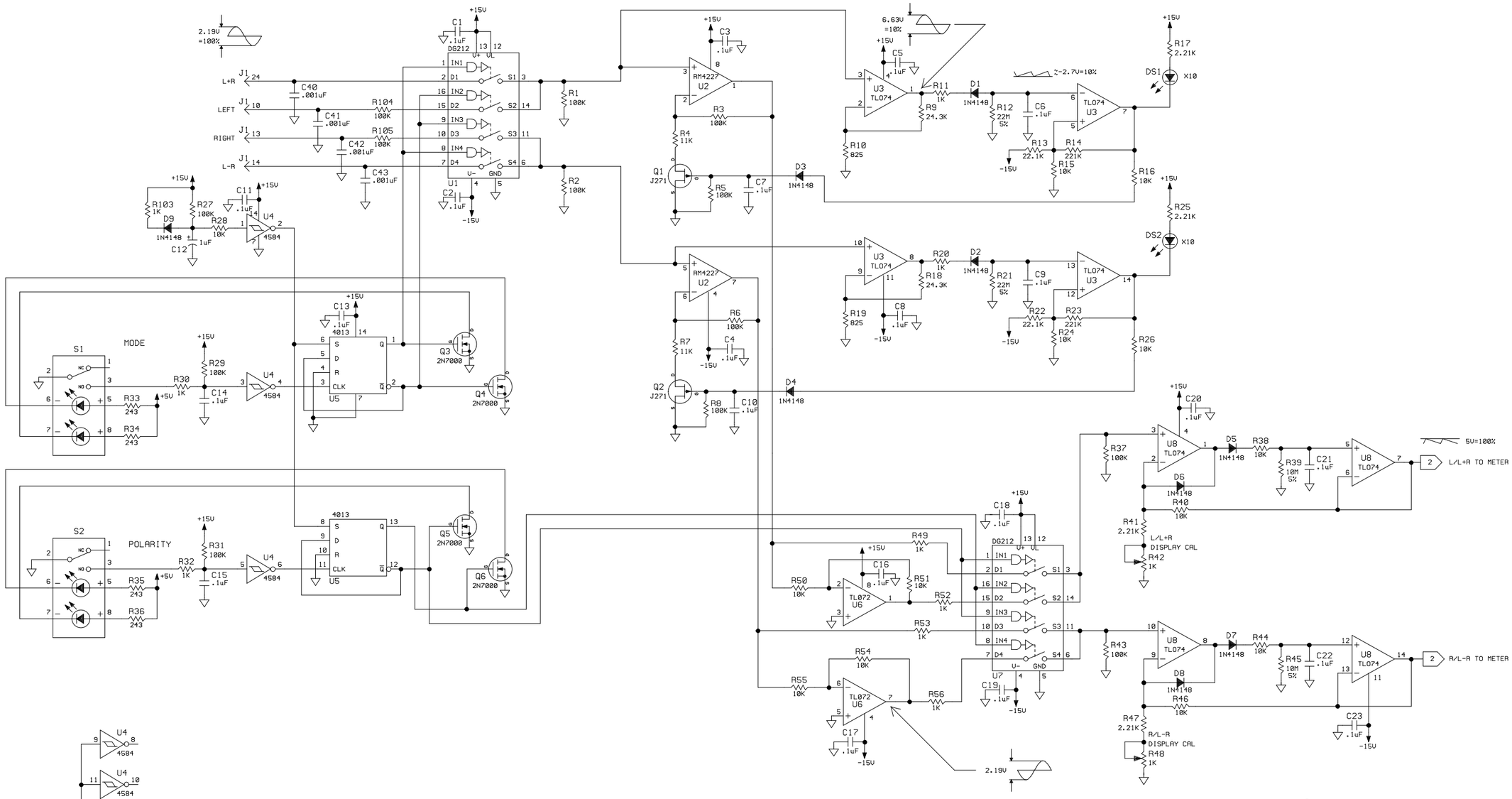

COPYRIGHT © 1996 BROADCAST ELECTRONICS, INC.

NOTES:

1. ALL RESISTORS IN OHMS: 1/4W, 1% UNLESS OTHERWISE SPECIFIED.
2. LAST COMPONENT USED: C43, D21, DS25, J2, Q7, R114, S11, U17
3. COMPONENTS NOT USED:
4. SEE ASSEMBLY: AD917-0306-001.

PROPRIETARY RIGHTS are included in information disclosed herein. This information is submitted in confidence and neither this document nor the information disclosed herein shall be reproduced or transferred to other documents or used or disclosed to others for manufacturing or for any other purpose except as specifically authorized in writing by BROADCAST ELECTRONICS, INC.

TOLERANCE (DECIMAL) U.O.S.
.x ± .030 .xxx ± .005
.xx ± .015 ANGLES ± 1°

DWN. BY 11-25-95 M. HAYDEN
CHKD
ME
PROJ. ENGR.
MFG.

MATERIAL: SEE BOM's 917-0306-001
FINISH: SEE DWG RA592-0000
NEXT ASSY.

BROADCAST ELECTRONICS INC.
4100 N. 24TH ST., P.O.BOX 3606 QUINCY, IL. 62305 217/224-9600
TELEX 250142 CABLE BROADCAST FAX 217/224-9607

TITLE: SCHEMATIC - ECU DISPLAY/ ECU CONTROL SWITCH BD

TYPE	SIZE	DWG. NO.	REV
S	B	917-0306-001	A

MODEL AM-1A | SCALE NONE | SHEET 1 OF 3

REVISIONS					
REV	DATE	DESCRIPTION	DFTSMN	ENGR	ECN
1	1-2-96	PROTOTYPE RELEASE	MERK	JW	----
A	8-15-96	ENGINEERING RELEASE WITHOUT CHANGE.	MH	JW	----
B	9-15-97	MOVED DOTS ON T201-T203.	KT		9848

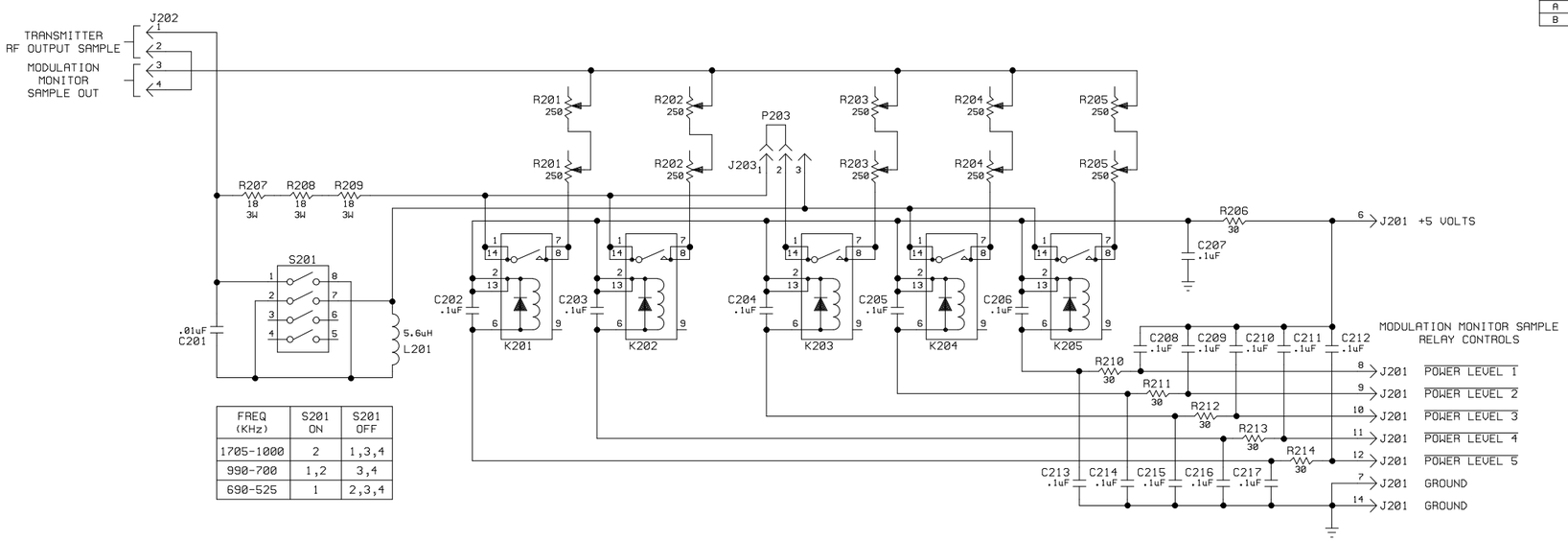

FREQ (KHz)	S201 ON	S201 OFF
1705-1000	2	1,3,4
990-700	1,2	3,4
690-525	1	2,3,4

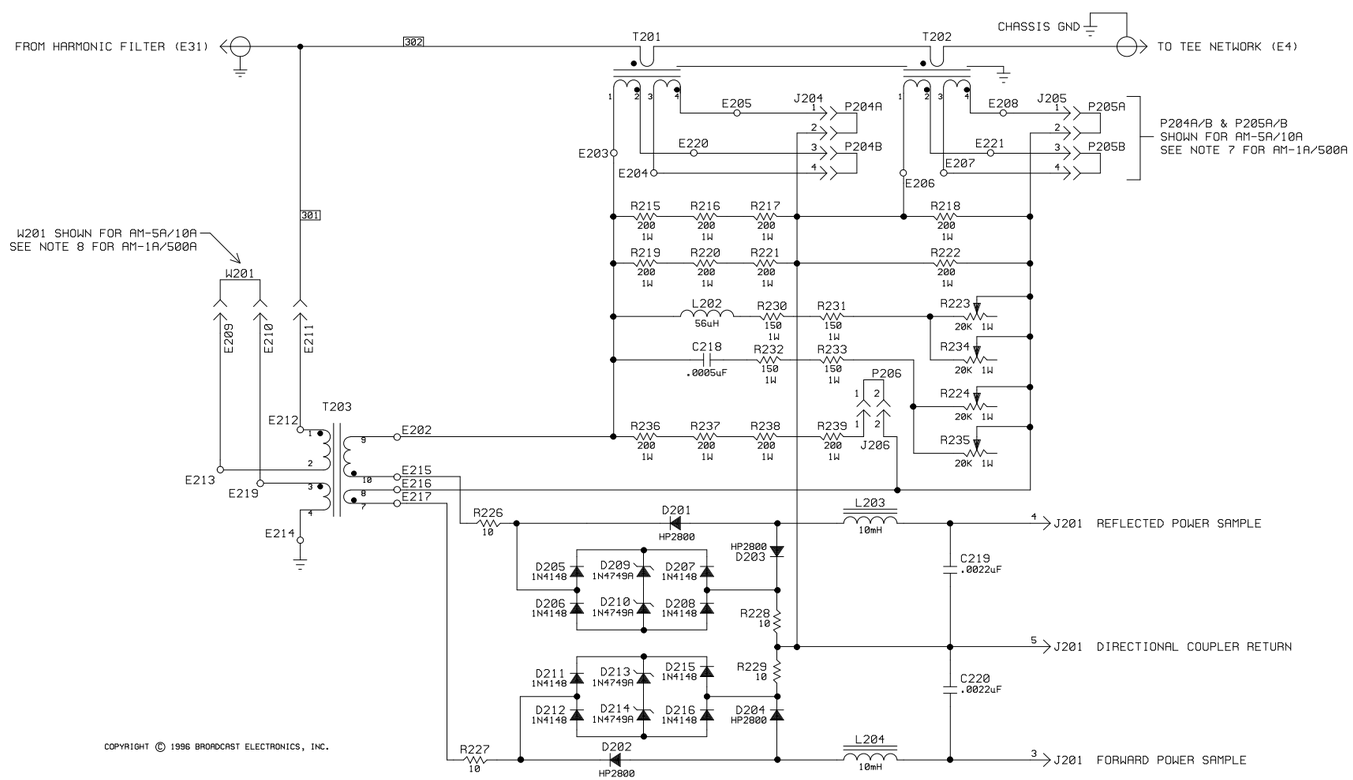

NOTES:

1. ALL REFERENCE DESIGNATORS START AT 201.
2. ALL RESISTORS IN OHMS: 1/4W, 1% UNLESS OTHERWISE SPECIFIED.
3. LAST COMPONENTS USED: C220, D216, E221, J206, K205, L204, R239, S201, T203, W201
4. COMPONENTS NOT USED: E201, E218, R225
5. SEE ASSEMBLY: AD917-0306
6. FOR POWER LEVEL 3 = HIGH POWER PLACE P203 ON J203 PINS 1&2. FOR POWER LEVEL 3 = LOW POWER PLACE P203 ON J203 PINS 2&3.
7. AM-1A/AM-500A: PLACE P204A/P205A ON J204/J205 PINS 2&3; AND PLACE P204B/P205B ON J204/J205 PIN 4 ONLY.
   AM-5A/AM-10A: PLACE P204A/P205A ON J204/J205 PINS 1&2; AND PLACE P204B/P205B ON J204/J205 PINS 3&4 AS SHOWN.
8. AM-1A/AM-500A: REMOVE W201 AND CONNECT WIRE #301 TO E210.
   AM-5A/AM-10A: PLACE W201 ON E209 & E210; AND CONNECT WIRE #301 TO E211 AS SHOWN.
9. WIRE #301 & #302 ARE PART OF OUTPUT NETWORK WIRE HARNESS ASSEMBLY.

COPYRIGHT © 1996 BROADCAST ELECTRONICS, INC.

PROPRIETARY RIGHTS are included in information disclosed herein. This information is submitted in confidence and neither this document nor the information disclosed herein shall be reproduced or transferred to other documents or used or disclosed to others for manufacturing or for any other purpose except as specifically authorized in writing by BROADCAST ELECTRONICS, INC.

TOLERANCE (DECIMAL) U.O.S.
.X ± .030 .XXX ± .005
.XX ± .015 ANGLES ± 1°

DWN. BY MERKEL 1-2-96
CHKD
ME
PROJ. ENGR.
MFG.

MATERIAL SEE BOM
917-0306-002
FINISH SEE DWG RAS92-0000
NEXT ASSY. AD917-0306

BROADCAST ELECTRONICS INC.
4100 N. 24TH ST., P.O.BOX 3606 QUINCY, IL. 62305 217/224-9600
TELEX 250142 CABLE BROADCAST FAX 217/224-9607

TITLE SCHEMATIC DIRECTIONAL COUPLER PCB

TYPE S SIZE B DWG. NO. 917-0306-002 REV B

MODEL AM-1A SCALE NONE SHEET 1 OF 1

COPYRIGHT © 1996 BROADCAST ELECTRONICS, INC.

REVISIONS					
REV	DATE	DESCRIPTION	DFTSMN	ENGR	ECN
1	1-2-96	PROTOTYPE RELEASE	MERK	JW	----
A	8-15-96	ENGINEERING RELEASE WITHOUT CHANGE.	MH	JW	----
B	2-16-97	ADDED J309,P309 & R301-R305.	MH		9757

COPYRIGHT © 1996 BROADCAST ELECTRONICS, INC.

NOTES:

1. ALL REFERENCE DESIGNATORS START AT 301.
2. LAST COMPONENTS USED: D305, J309, R305.
3. COMPONENTS NOT USED:
4. SEE ASSEMBLY: AD917-0306-003
5. FOR AM-2A PLACE P306/P307 ON J306/J307 PINS 1&2.
   FOR AM-6A/AM-10A PLACE P306/P307 ON J306/J307 PINS 2&3.
   FOR AM-6A PLACE P309 ON J309 PINS 1&2.

PROPRIETARY RIGHTS are included in information disclosed herein. This information is submitted in confidence and neither this document nor the information disclosed herein shall be reproduced or transferred to other documents or used or disclosed to others for manufacturing or for any other purpose except as specifically authorized in writing by BROADCAST ELECTRONICS, INC.

TOLERANCE (DECIMAL) U.O.S.
.x ± .030 .xxx ± .005
.xx ± .015 ANGLES ± 1°

DWN. BY MERKEL 1-2-96
CHKD
ME
PROJ. ENGR. JW 8-16-96
MFG.

MATERIAL SEE BOM
917-0306-003
FINISH
SEE DWG RA592-0000
NEXT ASSY. AD917-0306-003

BROADCAST ELECTRONICS INC.
4100 N. 24TH ST., P.O.BOX 3606 QUINCY, IL. 62305 217/224-9600
TELEX 250142 CABLE BROADCAST FAX 217/224-9607

TITLE SCHEMATIC
INTERFACE PCB

TYPE	SIZE	DWG. NO.	REV
S	B	917-0306-003	B

MODEL AM-1A,2A,6A,10A SCALE NONE SHEET 1 OF 1

REVISIONS					
REV	DATE	DESCRIPTION	DFTSMN	ENGR	ECN
1	1-2-96	PROTOTYPE RELEASE	MERK	JW	----
2	7-22-96	ADDED INFO FOR 917-0306-014.	MH	JW	----
3	7-23-96	ADDED C417-C420,J/P404 & J/P405.	MH	JW	----
A	8-15-96	ENGINEERING RELEASE WITHOUT CHANGE.	MH	JW	----
B	11-25-97	ADDED AM-1A, AM-500A, AM-10A, AM-6A, AM-2.5A	MSE		9903

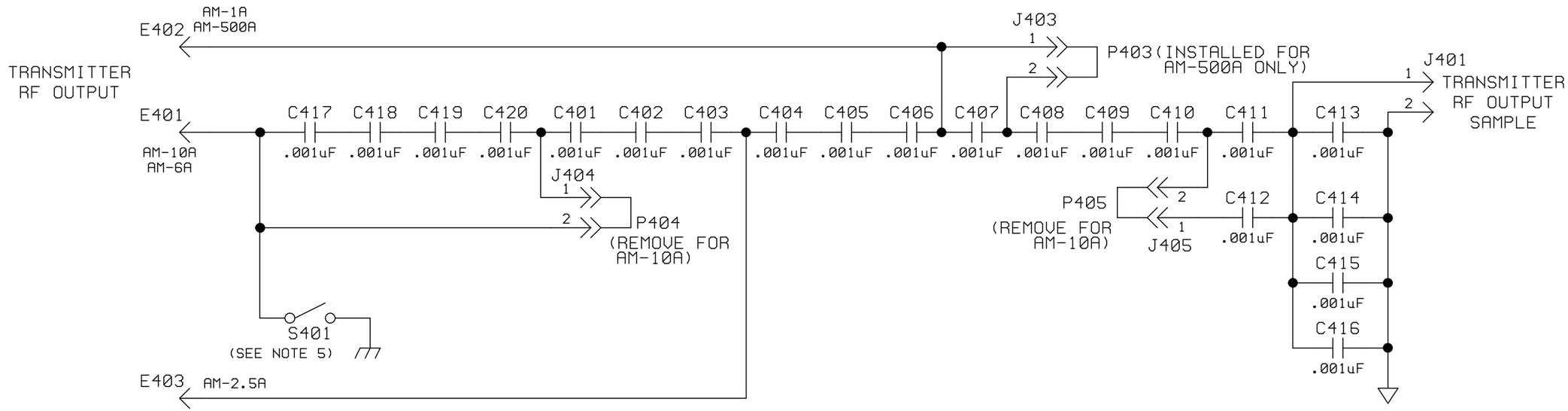

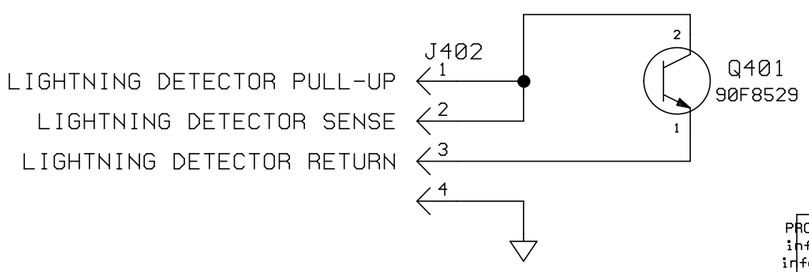

NOTES:

1. ALL REFERENCE DESIGNATORS START AT 401.
2. LAST COMPONENT USED: C420, E403, J405, P405, Q401, S401
3. COMPONENTS NOT USED:
4. SEE ASSEMBLY: AD917-0306-004/014.
5. S401 NOT USED ON 917-0306-014 (AM-1A).

COPYRIGHT © 1996 BROADCAST ELECTRONICS, INC.

PROPRIETARY RIGHTS are included in information disclosed herein. This information is submitted in confidence and neither this document nor the information disclosed herein shall be reproduced or transferred to other documents or used or disclosed to others for manufacturing or for any other purpose except as specifically authorized in writing by BROADCAST ELECTRONICS, INC.

TOLERANCE (DECIMAL) U.O.S.
.x ± .030 .xxx ± .005
.xx ± .015 ANGLES ± 1°

DWN. BY 1-2-96 MERKEL
CHKD
ME
PROJ. ENGR.
MFG.

MATERIAL
SEE BOM
917-0306-004
917-0306-014

FINISH
SEE DWG RA592-0000

NEXT ASSY.
957-0064

BROADCAST ELECTRONICS INC.
4100 N. 24TH ST., P.O.BOX 3606 QUINCY, IL. 62305 217/224-9600
TELEX 250142 CABLE BROADCAST FAX 217/224-9607

TITLE
SCHEMATIC
LIGHTNING DETECTOR PCB

TYPE	SIZE	DWG. NO.	REV
S	B	917-0306-004/014	B

MODEL AM-1A SCALE NONE SHEET 1 OF 1

COPYRIGHT © 1996 BROADCAST ELECTRONICS, INC.

REVISIONS					
REV	DATE	DESCRIPTION	DFTSMN	ENGR	ECN
1	1-2-96	PROTOTYPE RELEASE	MERK	JW	----
A	8-15-96	ENGINEERING RELEASE WITHOUT CHANGE.	MH		----

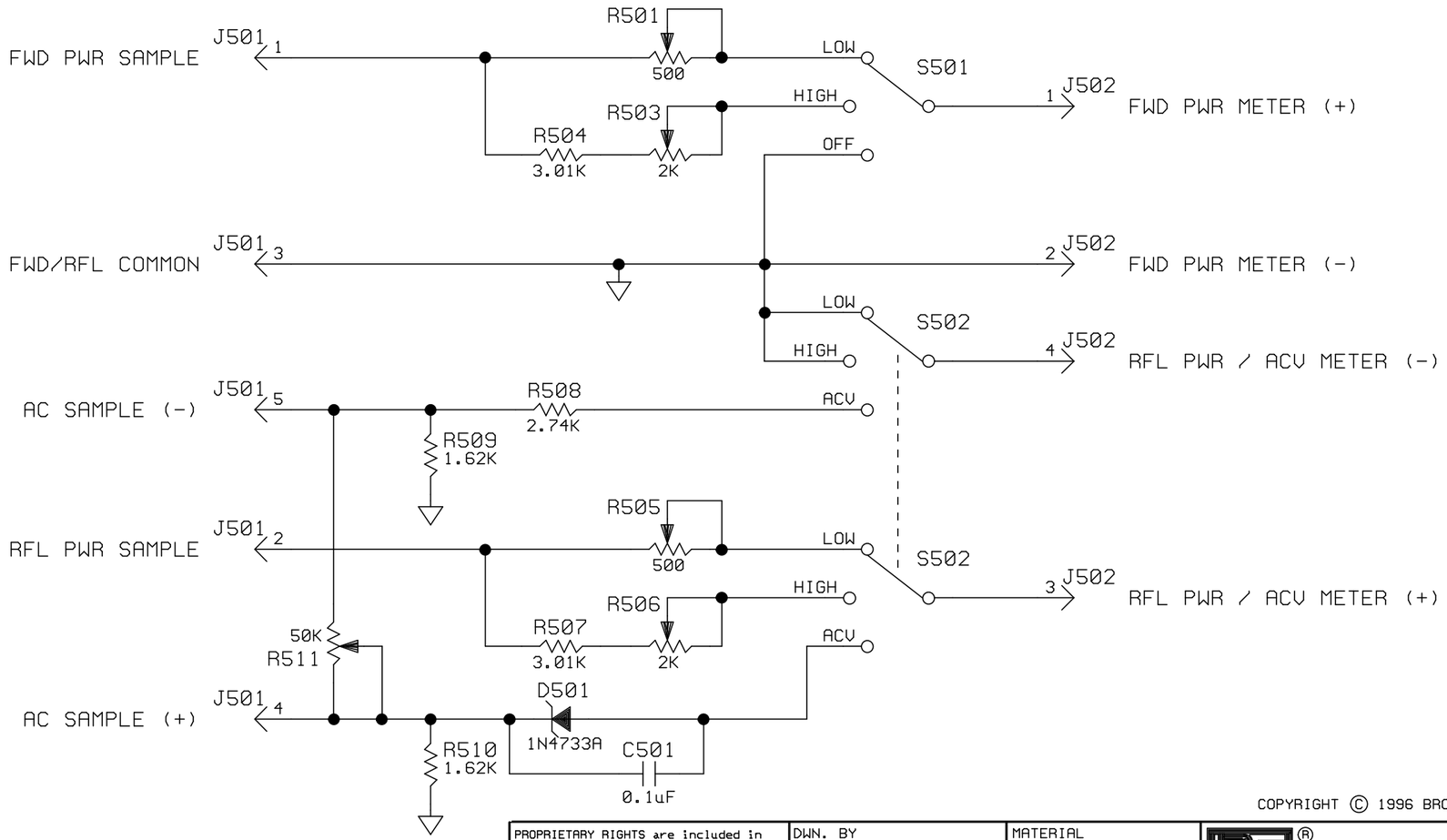

NOTES:

1. ALL REFERENCE DESIGNATORS START AT 501.
2. ALL RESISTORS ARE IN OHMS, 1/4W, 1%, UNLESS OTHERWISE SPECIFIED.
3. LAST COMPONENT USED: D501, J502, R511, S502
4. COMPONENTS NOT USED: R502
5. SEE ASSEMBLY: AD917-0306

PROPRIETARY RIGHTS are included in information disclosed herein. This information is submitted in confidence and neither this document nor the information disclosed herein shall be reproduced or transferred to other documents or used or disclosed to others for manufacturing or for any other purpose except as specifically authorized in writing by BROADCAST ELECTRONICS, INC.

TOLERANCE (DECIMAL) U.O.S.
.x ± .030 .xxx ± .005
.xx ± .015 ANGLES ± 1°

DWN. BY MERKEL 1-2-96
CHKD
ME
PROJ. ENGR.
MFG.

MATERIAL SEE BOM 917-0306-005
FINISH SEE DWG RA592-0000
NEXT ASSY. AD917-0306

COPYRIGHT © 1996 BROADCAST ELECTRONICS, INC.

BROADCAST ELECTRONICS INC.
4100 N. 24TH ST., P.O.BOX 3606 QUINCY, IL. 62305 217/224-9600
TELEX 250142 CABLE BROADCAST FAX 217/224-9607

TITLE SCHEMATIC ECU METER SWITCH PCB

TYPE S | SIZE B | DWG. NO. 917-0306-005 | REV A

MODEL AM-1A | SCALE NONE | SHEET 1 OF 1

REVISIONS					
REV	DATE	DESCRIPTION	DFTSMN	ENGR	ECN
1	1-2-96	PROTOTYPE RELEASE	MERK	JW	----
A	8-15-96	ENGINEERING RELEASE WITHOUT CHANGE.	MH		----

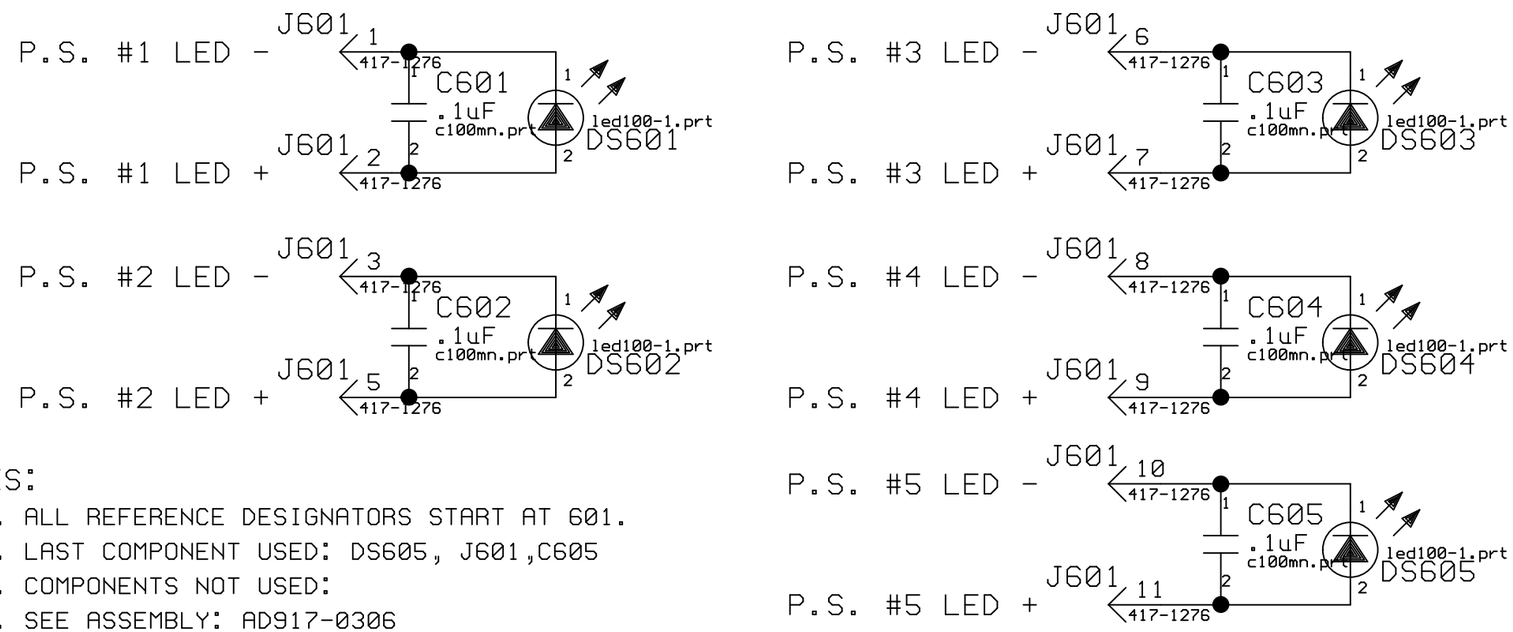

NOTES:

1. ALL REFERENCE DESIGNATORS START AT 601.
2. LAST COMPONENT USED: DS605, J601,C605
3. COMPONENTS NOT USED:
4. SEE ASSEMBLY: AD917-0306

COPYRIGHT © 1996 BROADCAST ELECTRONICS, INC.

PROPRIETARY RIGHTS are included in information disclosed herein. This information is submitted in confidence and neither this document nor the information disclosed herein shall be reproduced or transferred to other documents or used or disclosed to others for manufacturing or for any other purpose except as specifically authorized in writing by BROADCAST ELECTRONICS, INC.

TOLERANCE (DECIMAL) U.O.S.
.x ± .030 .xxx ± .005
.xx ± .015 ANGLES ± 1°

DWN. BY MERKEL 1-2-96
CHKD
ME
PROJ. ENGR.
MFG.

MATERIAL SEE BOM 917-0306-006
FINISH SEE DWG RA592-0000
NEXT ASSY. AD917-0306

BROADCAST ELECTRONICS INC.
4100 N. 24TH ST., P.O.BOX 3606 QUINCY, IL. 62305 217/224-9600
TELEX 250142 CABLE BROADCAST FAX 217/224-9607

TITLE SCHEMATIC POWER SUPPLY STATUS LED PCB

TYPE	SIZE	DWG. NO.	REV
S	A	917-0306-006	A

MODEL AM-1A SCALE NONE SHEET 1 OF 1

REVISIONS					
REV	DATE	DESCRIPTION	DFTSMN	ENGR	ECN
1	1-2-96	PROTOTYPE RELEASE	MERK	JW	----
A	8-15-96	ENGINEERING RELEASE WITHOUT CHANGE.	MH		----

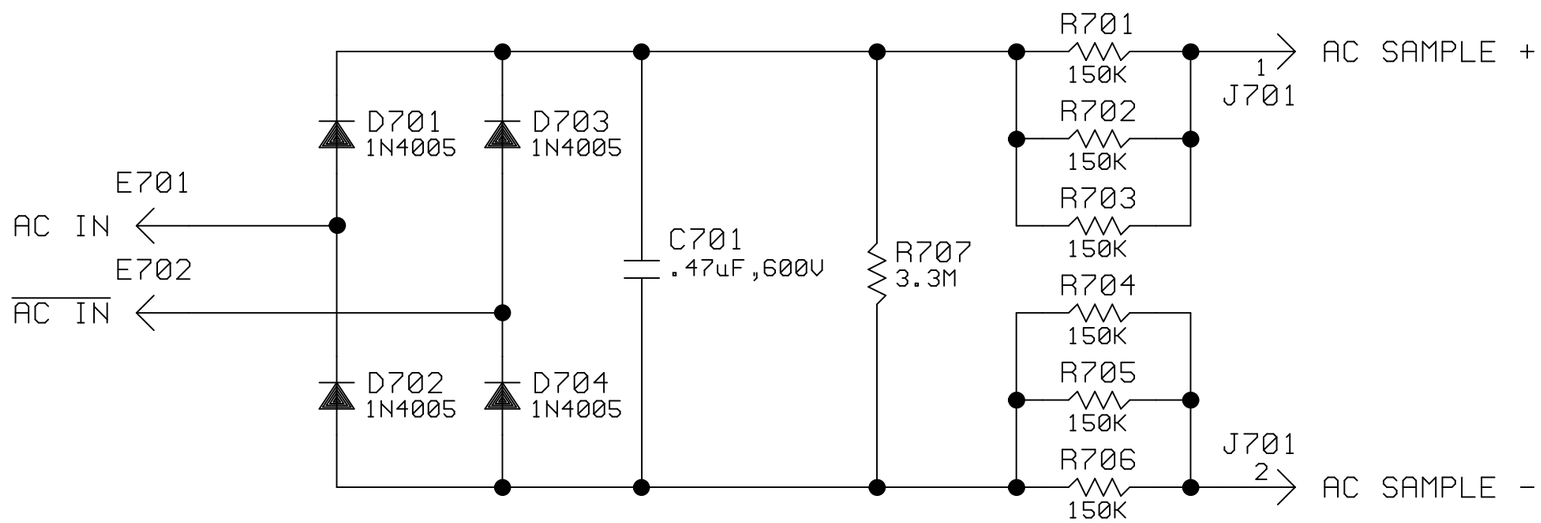

NOTES:
1. ALL REFERENCE DESIGNATORS START AT 701.
2. ALL RESISTORS IN OHMS, 1/4W, 1%, UNLESS OTHERWISE SPECIFIED.
3. LAST COMPONENT USED: C701, D704, E702, J701, R706
4. COMPONENTS NOT USED:
5. SEE ASSEMBLY: AD917-0306

COPYRIGHT © 1996 BROADCAST ELECTRONICS, INC.

PROPRIETARY RIGHTS are included in information disclosed herein. This information is submitted in confidence and neither this document nor the information disclosed herein shall be reproduced or transferred to other documents or used or disclosed to others for manufacturing or for any other purpose except as specifically authorized in writing by BROADCAST ELECTRONICS, INC.

TOLERANCE (DECIMAL) U.O.S.
.x ± .030 .xxx ± .005
.xx ± .015 ANGLES ± 1°

DWN. BY MERKEL 1-2-96
CHKD
ME
PROJ. ENGR.
MFG.

MATERIAL SEE BOM
917-0306-007

FINISH
SEE DWG RA592-0000

NEXT ASSY. AD917-0306

BROADCAST ELECTRONICS INC.®
4100 N. 24TH ST., P.O.BOX 3606 QUINCY, IL. 62305 217/224-9600
TELEX 250142 CABLE BROADCAST FAX 217/224-9607

TITLE SCHEMATIC
AC SAMPLE PCB

TYPE	SIZE	DWG. NO.	REV
S	A	917-0306-007	A

MODEL AM-1A SCALE NONE SHEET 1 OF 1

REVISIONS					
REV	DATE	DESCRIPTION	DFTSMN	ENGR	ECN
1	1-2-96	PROTOTYPE RELEASE	MERK	JW	----
A	8-15-96	ENGINEERING RELEASE WITHOUT CHANGE.	MH		----

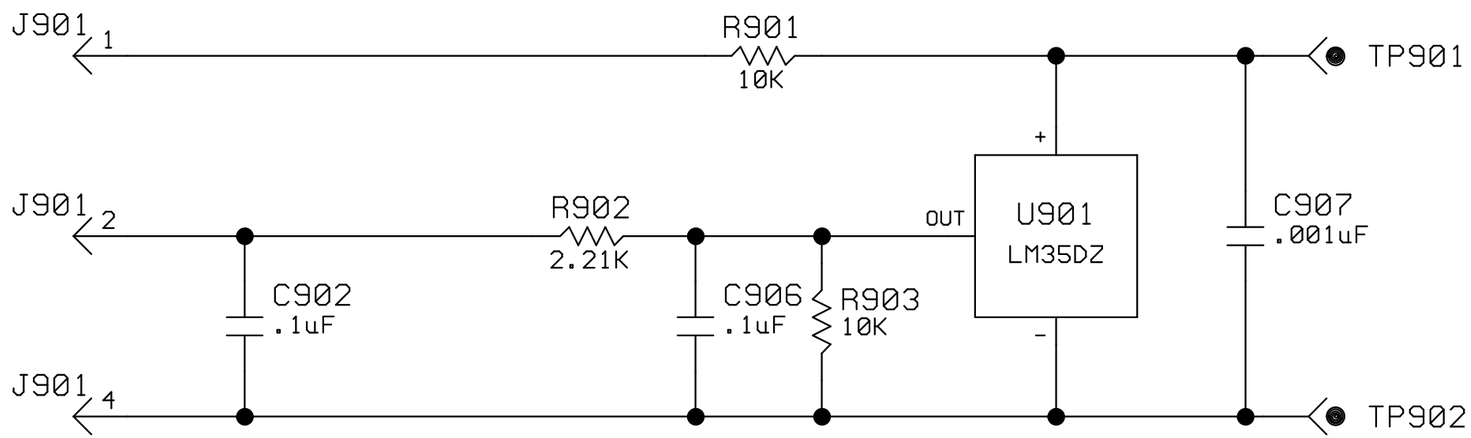

NOTES:

1. ALL REFERENCE DESIGNATORS START AT 901.
2. ALL RESISTORS IN OHMS; 1/4W, 1% UNLESS OTHERWISE SPECIFIED.
3. LAST COMPONENT USED: C907, J901, R903, TP902, U901
4. COMPONENTS NOT USED: C901,C903-C905.
5. SEE ASSEMBLY: AD917-0306

COPYRIGHT © 1996 BROADCAST ELECTRONICS, INC.

PROPRIETARY RIGHTS are included in information disclosed herein. This information is submitted in confidence and neither this document nor the information disclosed herein shall be reproduced or transferred to other documents or used or disclosed to others for manufacturing or for any other purpose except as specifically authorized in writing by BROADCAST ELECTRONICS, INC.

TOLERANCE (DECIMAL) U.O.S.
.x ± .030 .xxx ± .005
.xx ± .015 ANGLES ± 1°

DWN. BY MERKEL 1-2-96
CHKD
ME
PROJ. ENGR.
MFG.

MATERIAL SEE BOM 917-0306-009
FINISH SEE DWG RA592-0000
NEXT ASSY. AD917-0306

BROADCAST ELECTRONICS INC.®
4100 N. 24TH ST., P.O.BOX 3606 QUINCY, IL. 62305 217/224-9600
TELEX 250142 CABLE BROADCAST FAX 217/224-9607

TITLE SCHEMATIC TEMPERATURE SENSOR PCB

TYPE	SIZE	DWG. NO.	REV
S	A	917-0306-009	A

MODEL AM-1A | SCALE NONE | SHEET 1 OF 1

COPYRIGHT © 1996 BROADCAST ELECTRONICS, INC.

REVISIONS					
REV	DATE	DESCRIPTION	DFTSMN	ENGR	ECN
1	11-25-95	PROTOTYPE RELEASE	MH	JW	----
A	8-15-96	ENGINEERING RELEASE WITHOUT CHANGE.	MH		----

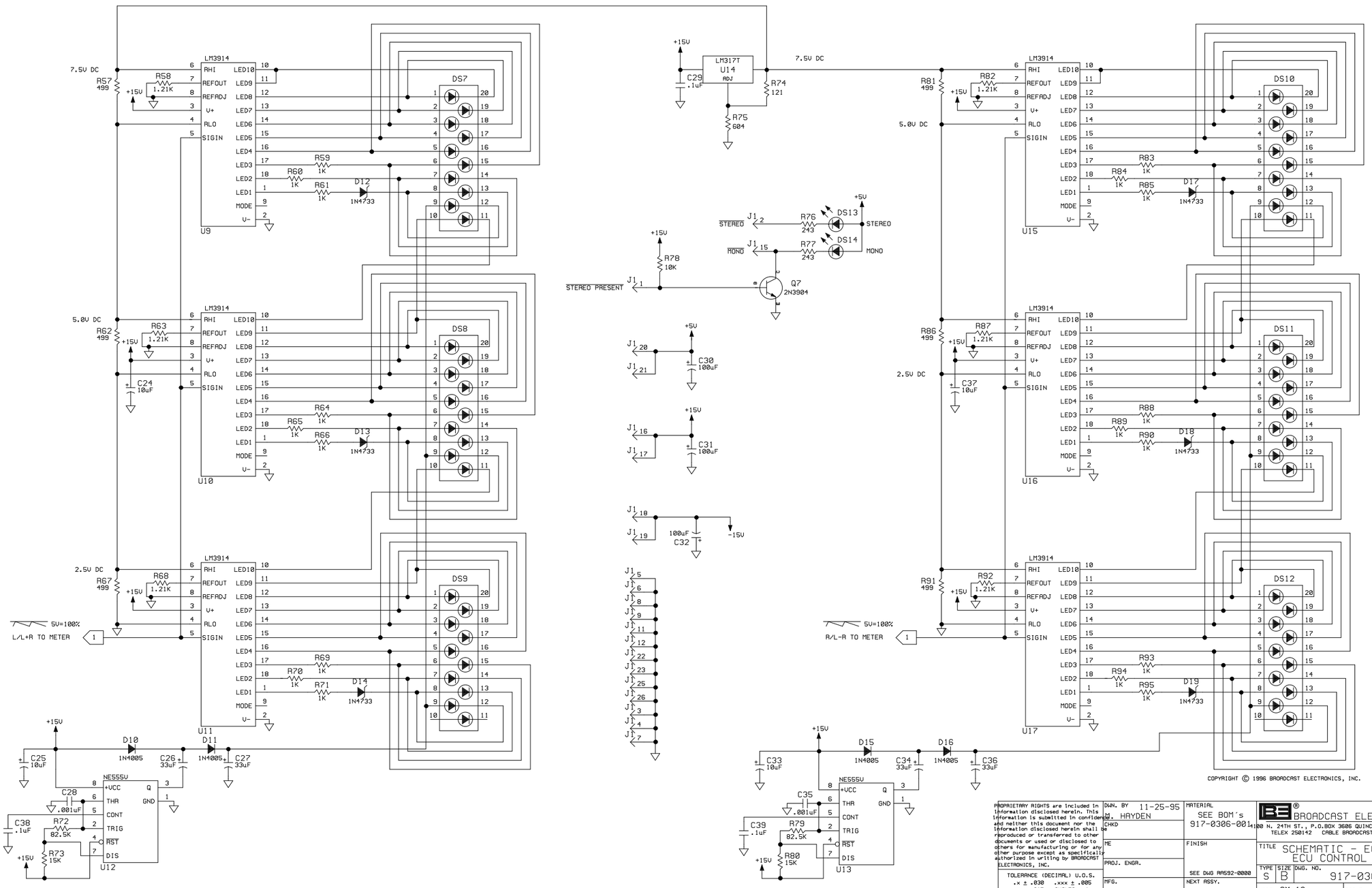

COPYRIGHT © 1996 BROADCAST ELECTRONICS, INC.

PROPRIETARY RIGHTS are included in information disclosed herein. This information is submitted in confidence and neither this document nor the information disclosed herein shall be reproduced or transferred to other documents or used or disclosed to others for manufacturing or for any other purpose except as specifically authorized in writing by BROADCAST ELECTRONICS, INC.

TOLERANCE (DECIMAL) U.O.S.
.x ± .030 .xxx ± .005
.xx ± .015 ANGLES ± 1°

DWN. BY 11-25-95
M. HAYDEN
CHKD
ME
PROJ. ENGR.
MFG.

MATERIAL
SEE BOM's
917-0306-001
FINISH
SEE DWG RA592-0000
NEXT ASSY.

BROADCAST ELECTRONICS INC.
4100 N. 24TH ST., P.O.BOX 3606 QUINCY, IL. 62305 217/224-9600
TELEX 250142 CABLE BROADCAST FAX 217/224-9607

TITLE SCHEMATIC - ECU DISPLAY/ ECU CONTROL SWITCH BD

TYPE	SIZE	DWG. NO.	REV
S	B	917-0306-001	A

MODEL AM-1A SCALE NONE SHEET 2 OF 3

REVISIONS					
REV	DATE	DESCRIPTION	DFTSMN	ENGR	ECN
1	11-25-95	PROTOTYPE RELEASE	MH	JW	----
A	8-15-96	ENGINEERING RELEASE WITHOUT CHANGE.	MH		----

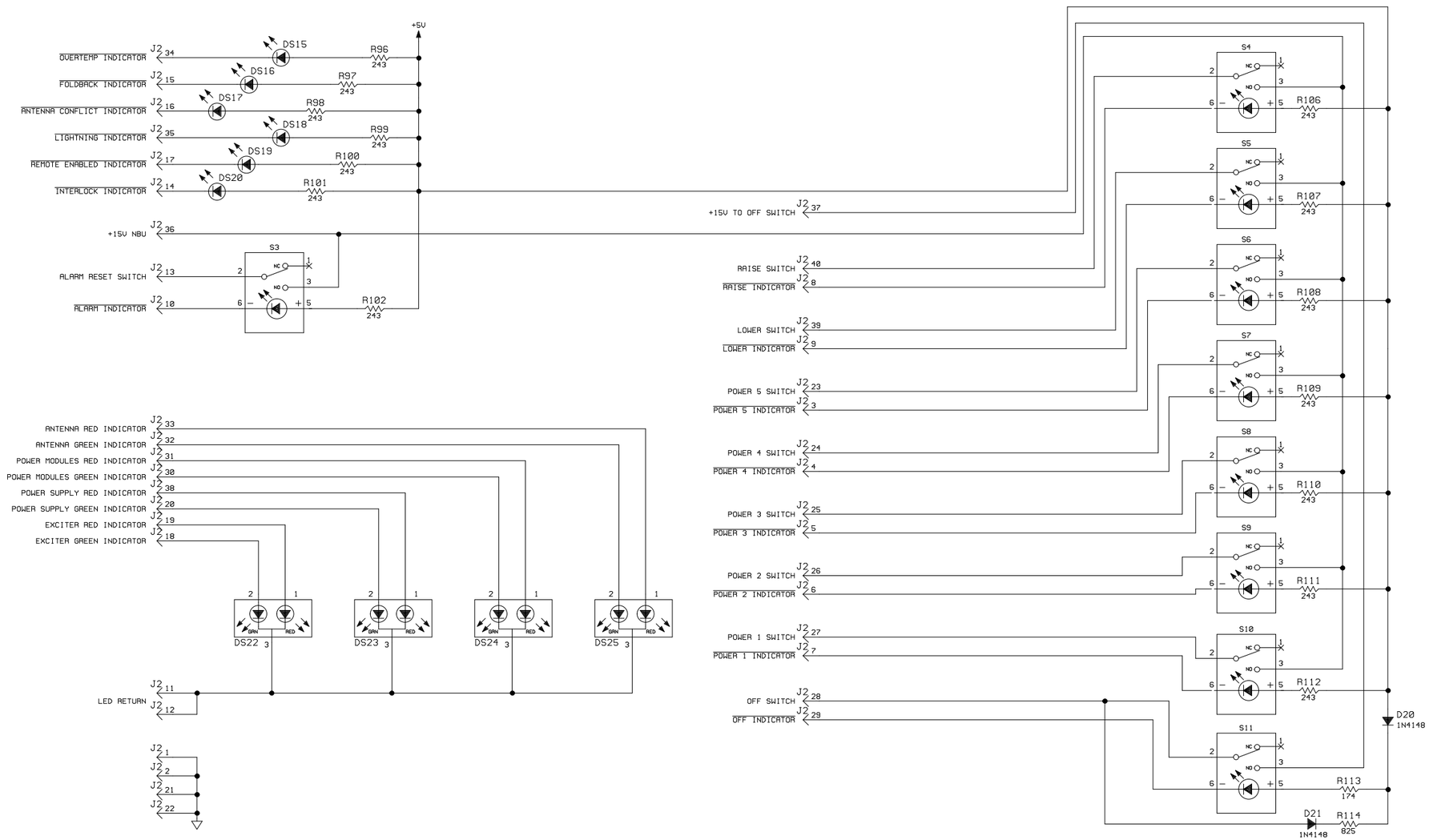

COPYRIGHT © 1996 BROADCAST ELECTRONICS, INC.

PROPRIETARY RIGHTS are included in information disclosed herein. This information is submitted in confidence and neither this document nor the information disclosed herein shall be reproduced or transferred to other documents or used or disclosed to others for manufacturing or for any other purpose except as specifically authorized in writing by BROADCAST ELECTRONICS, INC.

TOLERANCE (DECIMAL) U.O.S.
.x ± .030 .xxx ± .005
.xx ± .015 ANGLES ± 1°

DWN. BY 11-25-95
M. HAYDEN
CHKD
ME
PROJ. ENGR.
MFG.

MATERIAL
SEE BOM's
917-0306-001

FINISH
SEE DWG AA592-0000
NEXT ASSY.

COPYRIGHT © 1996 BROADCAST ELECTRONICS, INC.

BE® BROADCAST ELECTRONICS INC.
4100 N. 24TH ST., P.O.BOX 3606 QUINCY, IL. 62305 217/224-9600
TELEX 250142 CABLE BROADCAST FAX 217/224-9607

TITLE SCHEMATIC - ECU DISPLAY/ ECU CONTROL SWITCH BD

TYPE	SIZE	DWG. NO.	REV
S	B	917-0306-001	A

MODEL AM-1A SCALE NONE SHEET 3 OF 3

COPYRIGHT © 1996 BROADCAST ELECTRONICS, INC.

REVISIONS					
REV	DATE	DESCRIPTION	DFTSMN	ENGR	ECN
1	1-2-96	PROTOTYPE RELEASE	MERK	JW	----
2	7-22-96	ADDED 917-0306-014 TO 917-0306-004.	MH	JW	----
3	7-24-96	ADDED C417-C420,J/P404 & J/P405 ON -004/-014.	MH	JW	----
A	8-15-96	ENGINEERING RELEASE WITHOUT CHANGE.	MH	JW	----
B	2-18-97	ON -001:MOVED C42. ON -003 ADDED J309/P309 AND R301 THRU R305.	MH	JW	9757
C	3-25-97	C30, C31, C32 WERE 020-1083	MSE	DDL	9783
D	9-15-97	CHGD LEADS ON T201-T203.	KT	JW	9848
E	9-16-97	CHGD COMP. OUT LINE FOR C401-C420.	KT	JW	9850
F	4-13-99	DEL 2 TYRAPS AND ADDED NOTE ON -002.	KT		10125

NOTES:
1. FORM LEADS FOR R223 & R224 .05" AWAY FROM COMPONENT BODY. FORM LEADS FOR R234 & R235 .15" AWAY FROM COMPONENT BODY.
2. GLUE R223,R224,R234 & R235 TOGETHER AS SHOWN.

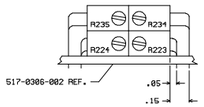

DETAIL "D" SCALE 2/1

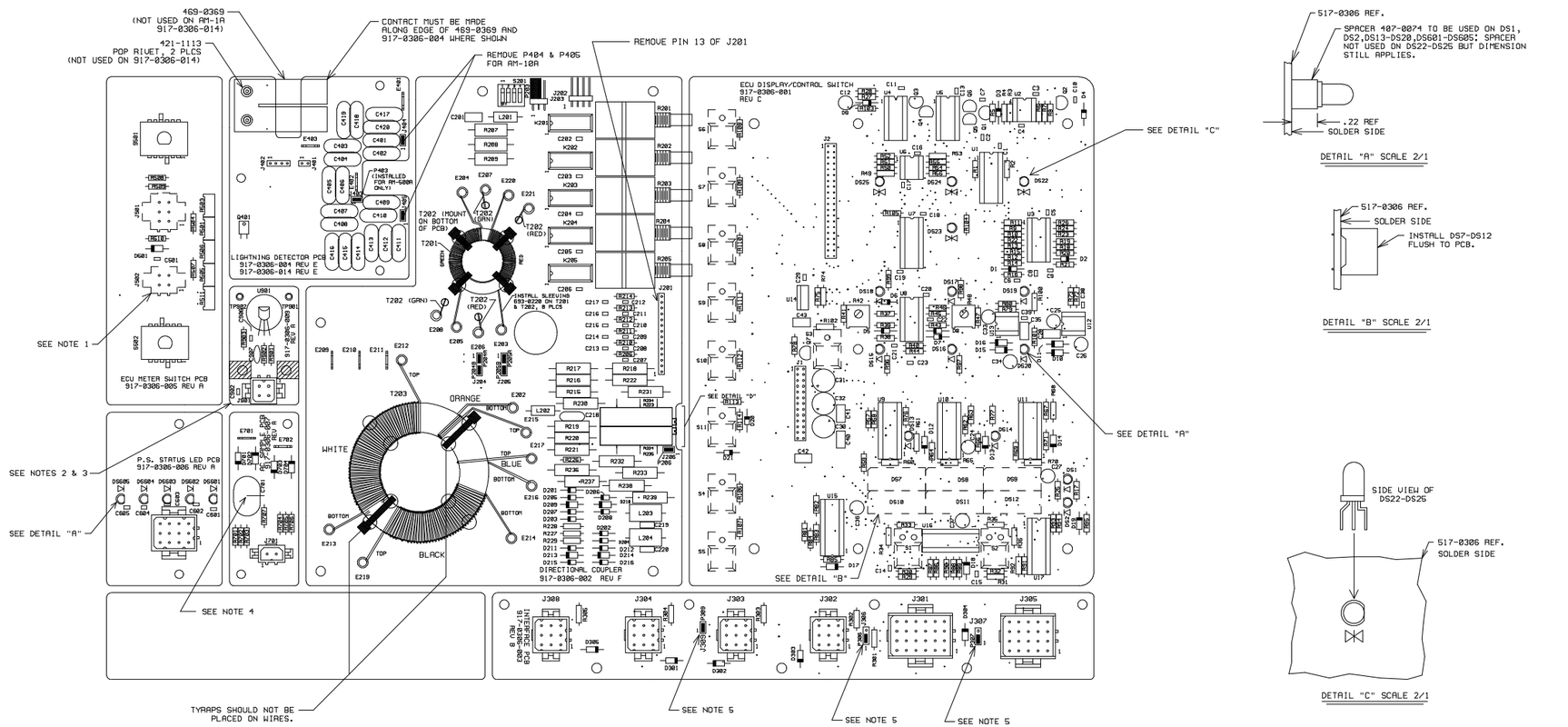

DETAIL "A" SCALE 2/1

DETAIL "B" SCALE 2/1

DETAIL "C" SCALE 2/1

COATING INSTRUCTIONS: (917-0306-009 PCB ONLY)
1. MASK BODY OF DEVICE U901 COMPLETELY. MASK TURRETS TP901 & TP902. INSERT 418-0240 DUMMY PLUG INTO J901. MASK BOTH SIDES OF PCB AT MOUNTING HOLES AS SHADED.
2. APPLY ONE COAT OF URETHANE CONFORMAL COATING (700-0126), TO BOTH SIDES OF PCB, PER VENDOR INSTRUCTIONS; THEN REMOVE MASKING.
3. ALLOW 15 MINUTES DRYING TIME.

NOTES:
1. ALL PARTS SHOWN WITH DASHED LINES TO BE MOUNTED FROM OPPOSITE SIDE.
2. U901 TO BE CENTERED IN .630 HOLE.
3. TEMP SENSOR PCB #916-0306-009 IS TO RECEIVE CONFORMAL COATING AFTER ASSEMBLY. SEE COATING INSTRUCTIONS.
4. COVER EXPOSED LEAD OF C701 WITH HEATSHRINK TUBING P/N 611-0060.
5. FOR AM-2A PLACE P306/P307 ON J306/J307 PINS 1 & 2. FOR AM-6A/AM-10A PLACE P306/P307 ON J306/J307 PINS 2 & 3. P309 USED ON AM-6A ONLY.

COPYRIGHT © 1996 BROADCAST ELECTRONICS, INC.

PROPRIETARY RIGHTS are included in information disclosed herein. This information is submitted in confidence and neither this document nor the information disclosed herein shall be reproduced or transferred to other documents or used or disclosed to others for manufacturing or for any other purpose except as specifically authorized in writing by BROADCAST ELECTRONICS, INC.

TOLERANCE (DECIMAL) U.O.S.
.X ± .030 .XXX ± .005
.XX ± .015 ANGLES ± 1°

DWN. BY MERK 1-2-96
CHKD
ME
PROJ. ENGR. JW 8-16-96
MFG.

MATERIAL SEE BOM'S 917-0306-001 THRU 917-0306-007, 917-0306-009, 917-0306-014
FINISH SEE DWG RA592-0000
NEXT ASSY.

BE BROADCAST ELECTRONICS INC.
4100 N.24TH ST. P.O.BOX 3686 QUINCY,IL. 62305 PH. 217/224-9600
TELEX 250142 CABLE BROADCAST FAX 217/224-9607

TITLE ASSEMBLY, ECU BREAK-AWAY PCB

TYPE	SIZE	DWG No.	REV
A	D	917-0306-001 THRU 917-0306-007,-009&-014	F

MODEL AM-1A / AM-2A AM-6A & AM-10A SCALE 1/1 SHEET 1 OF 1

AA	9-10-97	CONNECTED U23 PIN 2 TO GND: SEE SHEET 4 ALSO	KT	JW	9842	M	1-26-93	SEE SHEETS 2,3 & 5.	MH	JW	8840	D	6-28-91	MADE MINOR DESIGN CHGS
						N	2-3-93	CHGD CIRCUITS AROUND U24/A & U25/A: SEE SHTS 3,4,5	MH	JW	8876	-	7-16-91	ENGINEERING RELEASE
						P	2-9-93	SEE SHEET 3.	MH	JW	8887	E	8-8-91	ADDED C117-C125,D50,Q56-Q58
						R	2-9-93	SEE SHEET 5.	MH	JW	8897	F	11-2-91	CHGD U42,U43,U44,U70,RN6,U65,U66 TO +15V NBU
						S	2-10-93	SEE SHEET 4.	MH	JW	8898	G	12-5-91	ADDED R194,R195,D51,D52,J13,J14,P13,P14 TO SHT 5
						T	3-20-93	SEE SHEET 5.	MH	JW	8927	H	12-20-91	ADDED CIRCUIT U59
						U	7-2-93	SEE SHEETS 4 & 5.	MH	JW	8999	J	2-8-92	ADDED R187,D47,D48 TO SHT 3
						V	10-24-93	SEE SHEETS 2 & 5.	MH	BG	9096	K	2-28-92	CHGD VALUE OF R14,R75,R88,R189 SHTS 4,5
						W	8-5-94	C132 WAS 22uF; ALSO SEE SHEET 4.	MH	JW	9221	L	7-8-92	CHGD VALUE OF C131,C132,R200;ADDED R201 SHT 1
						Y	3-2-95	UPDATED NOTES. ALSO SEE SHEET 5.	JLF	JW	9346			

JAH	JW	----	REV	DATE	DESCRIPTION	DFTSMN	ENGR	ECN
JAH	JW	8556	A	7-6-90	PROTOTYPE RELEASE	JAH	CD	----
JAH	JW	8598	B	1-19-91	REDESIGNED	JAH	JW	----
JAH	JW	8623	C	4-10-91	MADE MAJOR CHGS TO SHT 5	JAH	JW	----
JAH	JW	8643						
JAH	JW	8692						
JAH	JW	8709						
JAH	JW	8770						

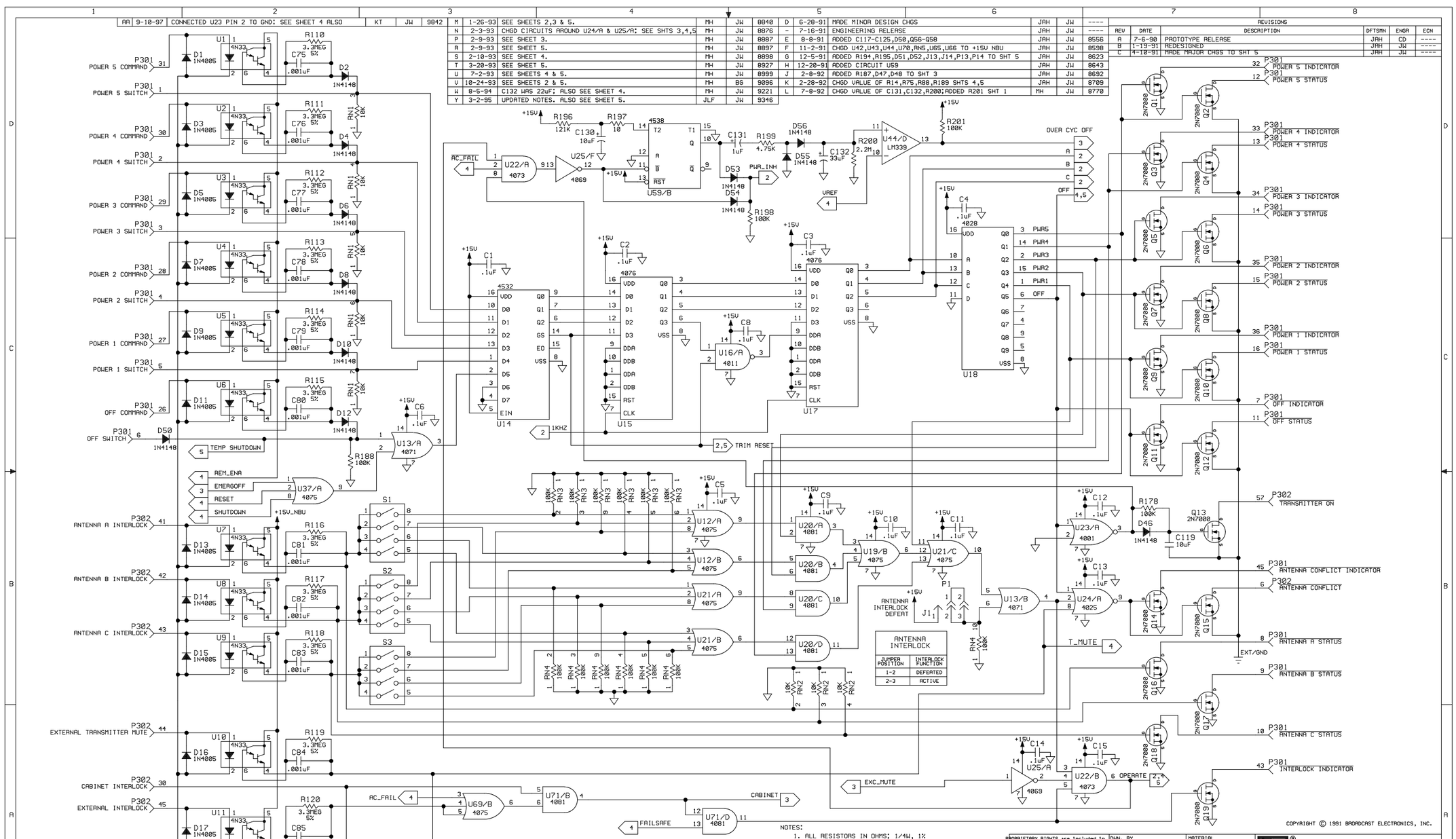

ANTENNA INTERLOCK	
JUMPER POSITION	INTERLOCK FUNCTION
1-2	DEFEATED
2-3	ACTIVE

COPYRIGHT © 1991 BROADCAST ELECTRONICS, INC.

AK	3-8-04	ADDED C119,D46 & R178	KT		11102
AJ	11-14-03	ADDED NOTE 6, SEE SHEET 2 ALSO	KT	JW	11075
AC	2-16-99	SEE SHEET 5.	KT	JW	10095
AB	10-8-97	UPDATED NOTES: ALSO SEE SHEET 5.	KT	JW	9871

NOTES:

1. ALL RESISTORS IN OHMS; 1/4W, 1% UNLESS OTHERWISE SPECIFIED.
2. LAST COMPONENT USED: C137, D64, DS3, E10, J20, P302, QS9, R210, RN8, S5, TP12, U71, W2
3. COMPONENTS NOT USED: C120, D48, D52 E1-9, R180, R182, R185-186
4. SEE ASSEMBLY: AC 917-0205
5. N INDICATES PAGE No. OF SIGNAL CONTINUATION.
6. * W1 & W2 NOT NORMALLY INSTALLED. INSTALL W1 IF POWER LEVEL 5 IS BELOW STANDARD, INSTALL W2 IF POWER LEVEL 4 IS BELOW STANDARD

PROPRIETARY RIGHTS are included in information disclosed herein. This information is submitted in confidence and neither this document nor the information disclosed herein shall be reproduced or transferred to other documents or used or disclosed to others for manufacturing or for any other purpose except as specifically authorized in writing by BROADCAST ELECTRONICS, INC.

TOLERANCE (DECIMAL) U.O.S.
.x ± .030 .xxx ± .005
.xx ± .015 ANGLES ± 1°

DWN. BY JAH 7-6-90
CHKD MH 7-17-91
ME
PROJ. ENGR. JW 7-17-91
MFG.

MATERIAL SEE B/M 917-0205
FINISH
~~SEE DWG RA692-0030~~
NEXT ASSY. AC 917-0205

BROADCAST ELECTRONICS INC.
4100 N. 24TH ST., P.O.BOX 3606 QUINCY, IL. 62305 217/224-9600
TELEX 250142 CABLE BROADCAST FAX 217/224-9607

TITLE ECU CONTROLLER

TYPE	SIZE	DWG. NO.	REV
S	B	917-0205	AK

MODEL AM-1/2.5/5 SCALE NONE SHEET 1 OF 5

V	10-24-93	CONNECTED U24 PINS 11,12&13 TO GND; U40 PIN 12 TO GND & U40 PIN 13 TO 14.	MH	JW	9096	-	7-17-91	ADDED E11 MOVED C34,R91,C108	JAH	JW	----
						E	8-12-91	REMOVED E2-E9	JAH	JW	8556
AE	8-20-99	CHGD R124 FROM 5.76K TO 6.34K	KT	JW	10176	F	11-2-91	CHGD U42,U43,R21,R109,U70 TO +15V NBU	JAH	JW	8598
AG	7-28-00	CHGD R18 FROM 1.75K TO 1K	KT	JW	10325	H	12-20-91	DELETED U25/F ADDED PWR INH NET	JAH	JW	8643
AH	10-30-00	CHGD R124 FROM 6.34K TO 6.81K	KT	JW	10372	M	1-27-93	ADDED J19/P19,Q59 & R202.	MH	JW	8840
AJ	11-14-03	ADDED W1 & W2	KT	JW	11075						

REVISIONS					
REV	DATE	DESCRIPTION	DFTSMN	ENGR	ECN
A	7-6-90	PROTOTYPE RELEASE	JAH	CD	----
B	1-19-91	REDESIGNED	JAH	JW	----
C	4-10-91	MADE MAJOR CHGS TO SHT 5	JAH	JW	----
D	6-28-91	ADDED E11 MOVED C34,R91,C108	JAH	JW	----

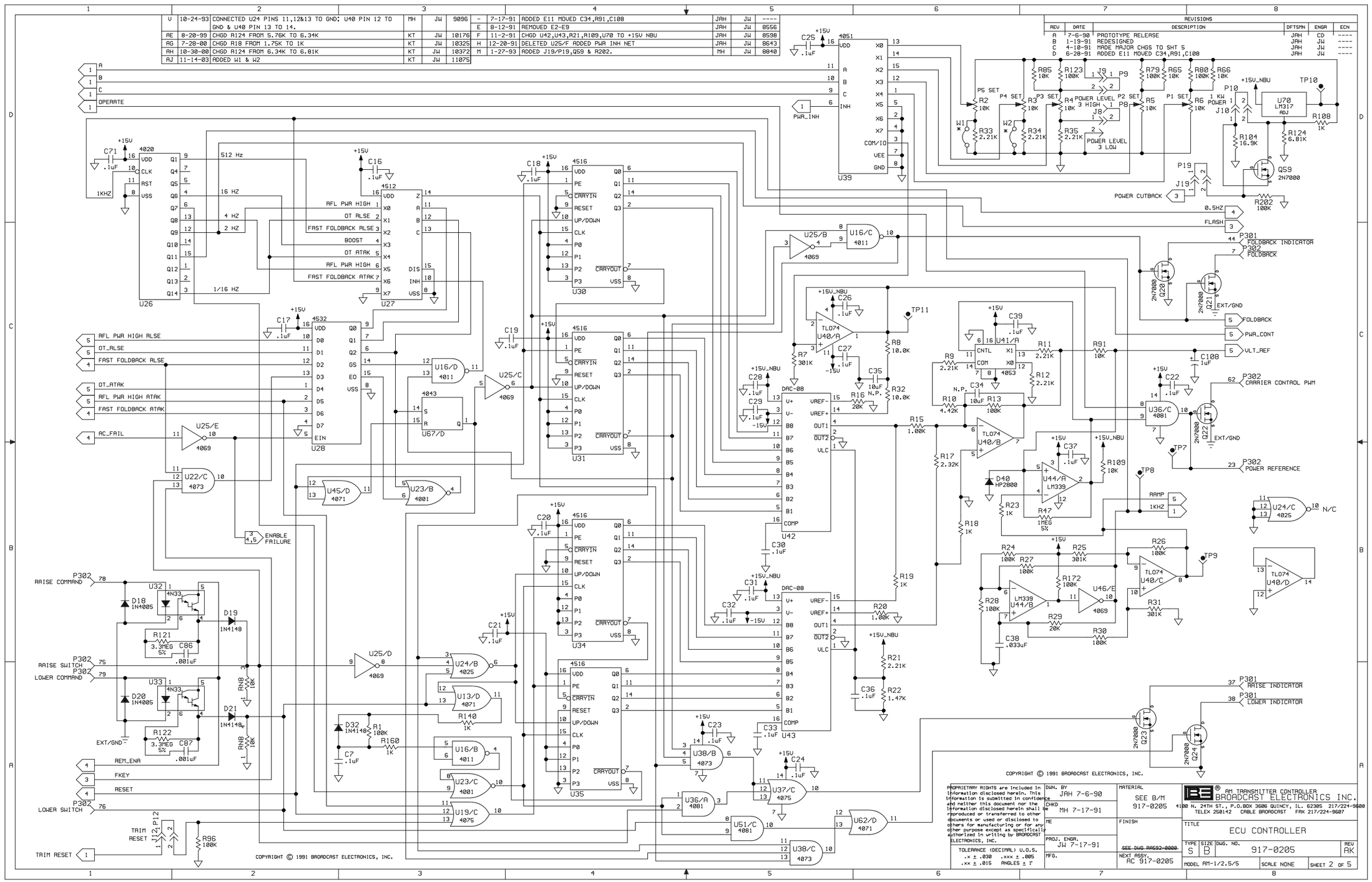

PROPRIETARY RIGHTS are included in information disclosed herein. This information is submitted in confidence and neither this document nor the information disclosed herein shall be reproduced or transferred to other documents or used or disclosed to others for manufacturing or for any other purpose except as specifically authorized in writing by BROADCAST ELECTRONICS, INC.

TOLERANCE (DECIMAL) U.O.S.
.x ± .030 .xx ± .005
.xx ± .015 ANGLES ± 1°

DWN. BY JAH 7-6-90
CHKD MH 7-17-91
ME
PROJ. ENGR. JW 7-17-91
MFG.

MATERIAL SEE B/M 917-0205
FINISH
~~SEE DWG RAS92-0008~~
NEXT ASSY. AC 917-0205

AM TRANSMITTER CONTROLLER
BROADCAST ELECTRONICS INC.
4100 N. 24TH ST., P.O.BOX 3606 QUINCY, IL. 62305 217/224-9600
TELEX 250142 CABLE BROADCAST FAX 217/224-9607

TITLE ECU CONTROLLER

TYPE S | SIZE B | DWG. NO. 917-0205 | REV AK

MODEL AM-1/2.5/5 | SCALE NONE | SHEET 2 OF 5

REVISIONS					
REV	DATE	DESCRIPTION	DFTSMN	ENGR	ECN
A	7-6-90	PROTOTYPE RELEASE	JAH	CD	----
B	1-19-91	REDESIGNED	JAH	JW	----
C	4-10-91	MADE MAJOR CHGS TO SHT 5	JAH	JW	----
D	6-28-91	ADDED GATES U45A,U71C	JAH	JW	----
-	7-17-91	ENGINEERING RELEASE	JAH	JW	----
F	11-2-91	ADDED R193 CHGD RN5 TO +15V NBU	JAH	JW	8598
H	12-20-91	ADDED OVER CYC OFF NET	JAH	JW	8643
J	2-8-92	ADDED R187,D47,D48	JAH	JW	8692
M	1-27-93	ADDED D57-D60.	MH	JW	8840
N	2-3-93	ADDED D61,D62 & R203.	MH	JW	8876
P	2-9-93	ADDED C133,C134,R204 & R205.	MH	JW	8887
AD	5-24-99	ADDED Q56.	KT	JW	10148

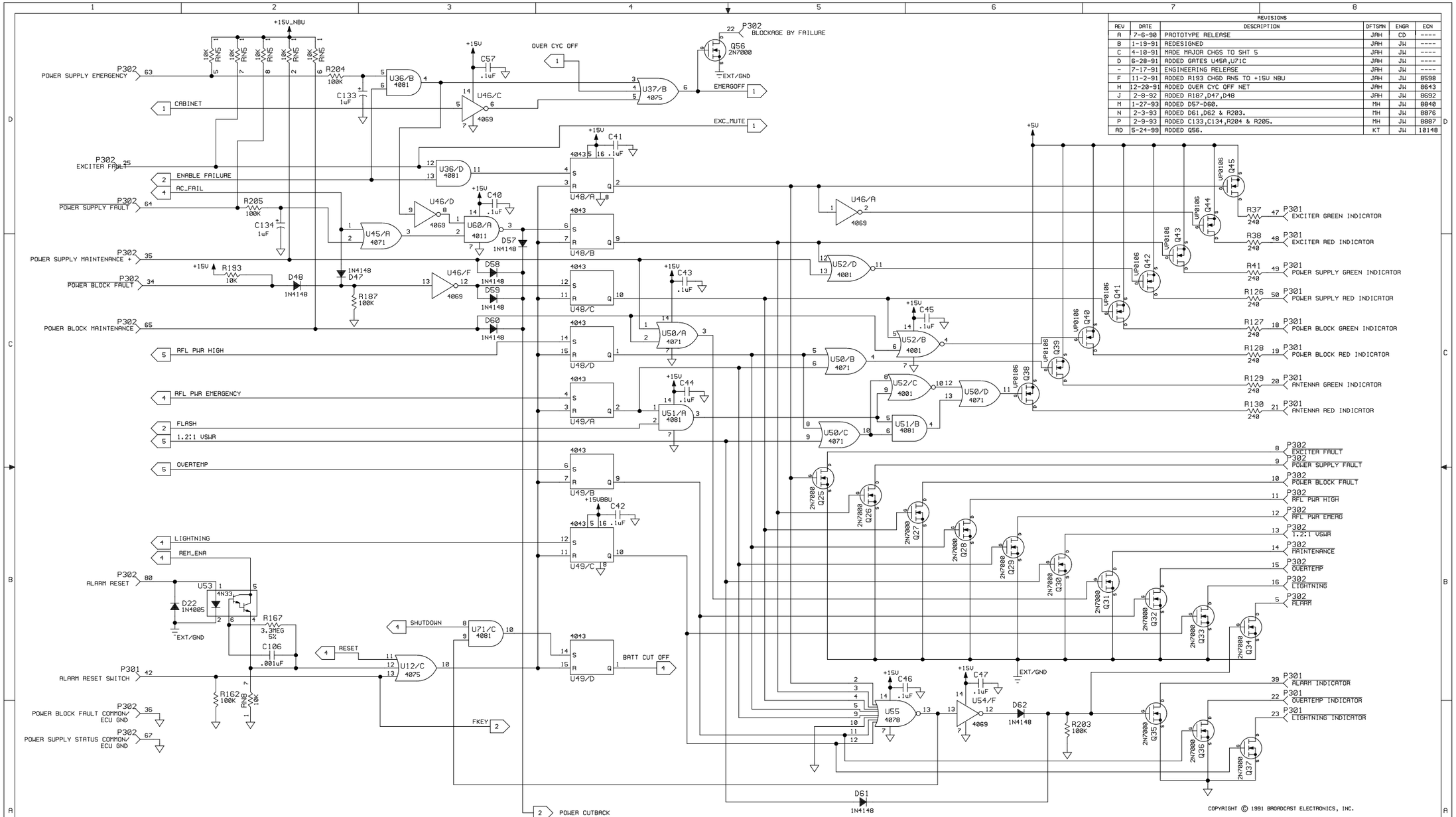

COPYRIGHT © 1991 BROADCAST ELECTRONICS, INC.

PROPRIETARY RIGHTS are included in information disclosed herein. This information is submitted in confidence and neither this document nor the information disclosed herein shall be reproduced or transferred to other documents or used or disclosed to others for manufacturing or for any other purpose except as specifically authorized in writing by BROADCAST ELECTRONICS, INC.

TOLERANCE (DECIMAL) U.O.S.
.x ± .030 .xxx ± .005
.xx ± .015 ANGLES ± 1°

DWN. BY JAH 7-6-90	MATERIAL SEE B/M 917-0205	BROADCAST ELECTRONICS INC.	
CHKD MH 7-17-91		4100 N. 24TH ST., P.O.BOX 3606 QUINCY, IL. 62305 217/224-9600 TELEX 250142 CABLE BROADCAST FAX 217/224-9607	
ME	FINISH	TITLE ECU CONTROLLER	
PROJ. ENGR. JW 7-17-91	SEE DWG RA592-0000	TYPE S SIZE B DWG. NO. 917-0205	REV AK
MFG.	NEXT ASSY.	MODEL AM-1/2.5/5 SCALE NONE	SHEET 3 OF 5

AF	3-31-00	C133 & C134 WERE 003-1066	KT	JW	10292

AA	9-10-97	R179 WAS 100K;ADDED C135; DEL D43 & R180.	KT	JW	9842	U	7-2-93	ADDED R209 & R210; DELETED C119,D46,Q56,R178,R182 & R206.	MH	JW	8999		
						W	8-5-94	R179 WAS 301K.	MH	JW	9221		

REVISIONS

REV	DATE	DESCRIPTION	DFTSMN	ENGR	ECN
A	7-6-90	PROTOTYPE RELEASE	JAH	CD	----
B	1-19-91	REDESIGNED	JAH	JW	----
C	4-10-91	MADE MAJOR CHGS TO SHT 5	JAH	JW	----
-	7-17-91	ENGINEERING RELEASE	JAH	JW	----
E	8-8-91	CHGD VALUE OF R88 TO 121K	JAH	JW	8556
F	11-2-91	CHGD R42 TO 392;R43 TO 182 RN7,R187 TO +15V NBU	JAH	JW	8598
H	12-20-91	DELETED CIRCUIT U44/D	JAH	JW	8643
K	2-28-92	CHGD VALUE OF R88 TO 150K	JAH	JW	8709
N	2-3-93	CHGD U19-8 CONNECTION TO T_MUTE.	MH	JW	8876
S	2-10-93	Q55 WAS A J310;ADDED D63,D64,R206,R207 & TP12.	MH	JW	8898

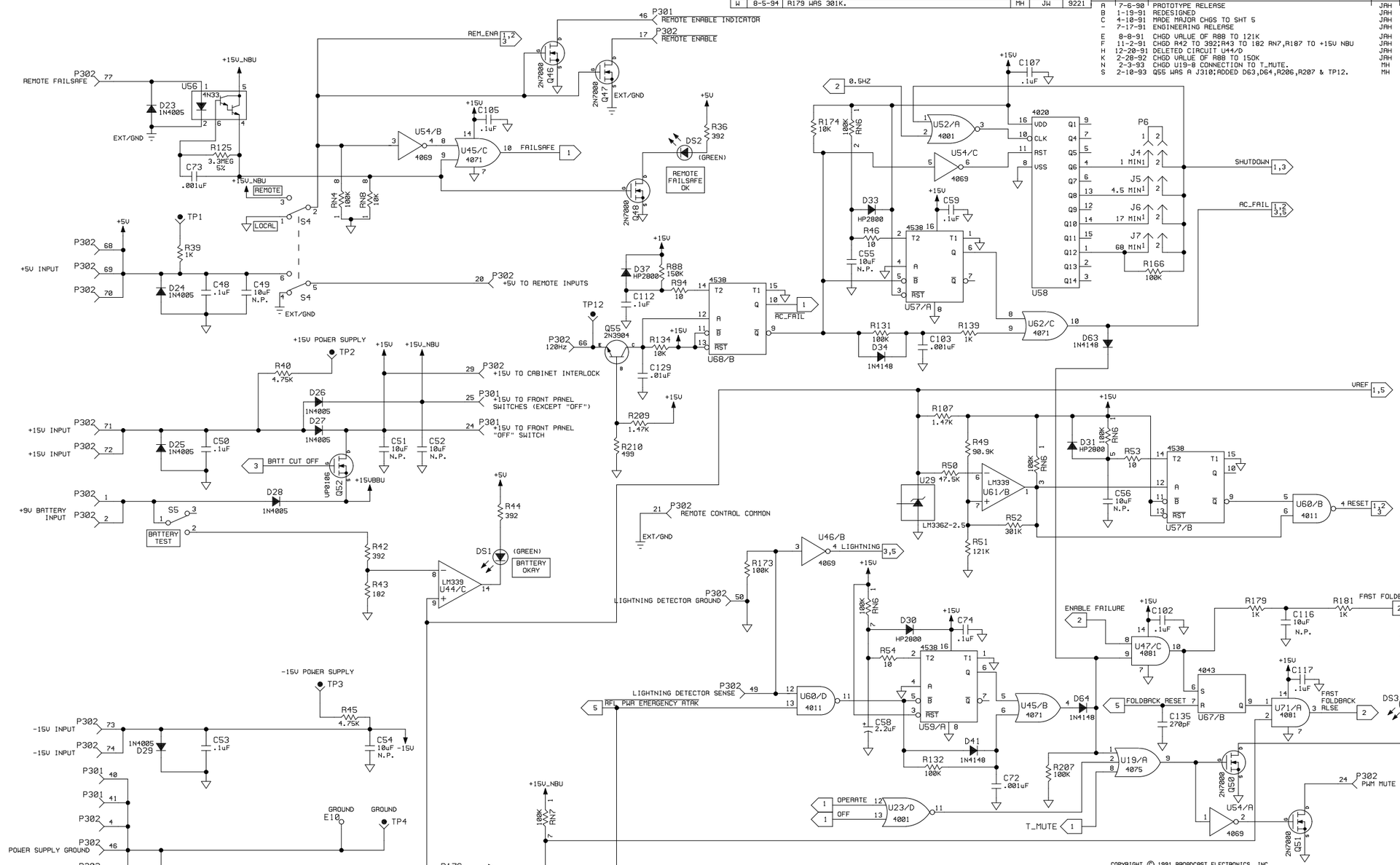

COPYRIGHT © 1991 BROADCAST ELECTRONICS, INC.

PROPRIETARY RIGHTS are included in information disclosed herein. This information is submitted in confidence and neither this document nor the information disclosed herein shall be reproduced or transferred to other documents or used or disclosed to others for manufacturing or for any other purpose except as specifically authorized in writing by BROADCAST ELECTRONICS, INC.

TOLERANCE (DECIMAL) U.O.S.
.x ± .030 .xxx ± .005
.xx ± .015 ANGLES ± 1°

DWN. BY JAH 7-6-90
CHKD MH 7-17-91
ME
PROJ. ENGR. JW 7-17-91
MFG.

MATERIAL SEE B/M 917-0205
FINISH ~~SEE DWG R4692-0000~~
NEXT ASSY. AC 917-0205

BROADCAST ELECTRONICS INC.
4100 N. 24TH ST., P.O.BOX 3606 QUINCY, IL. 62305 217/224-9600
TELEX 250142 CABLE BROADCAST FAX 217/224-9687

TITLE ECU CONTROLLER

TYPE	SIZE	DWG. NO.	REV
S	B	917-0205	AK

MODEL AM-1/2.5/S SCALE NONE SHEET 4 OF 5

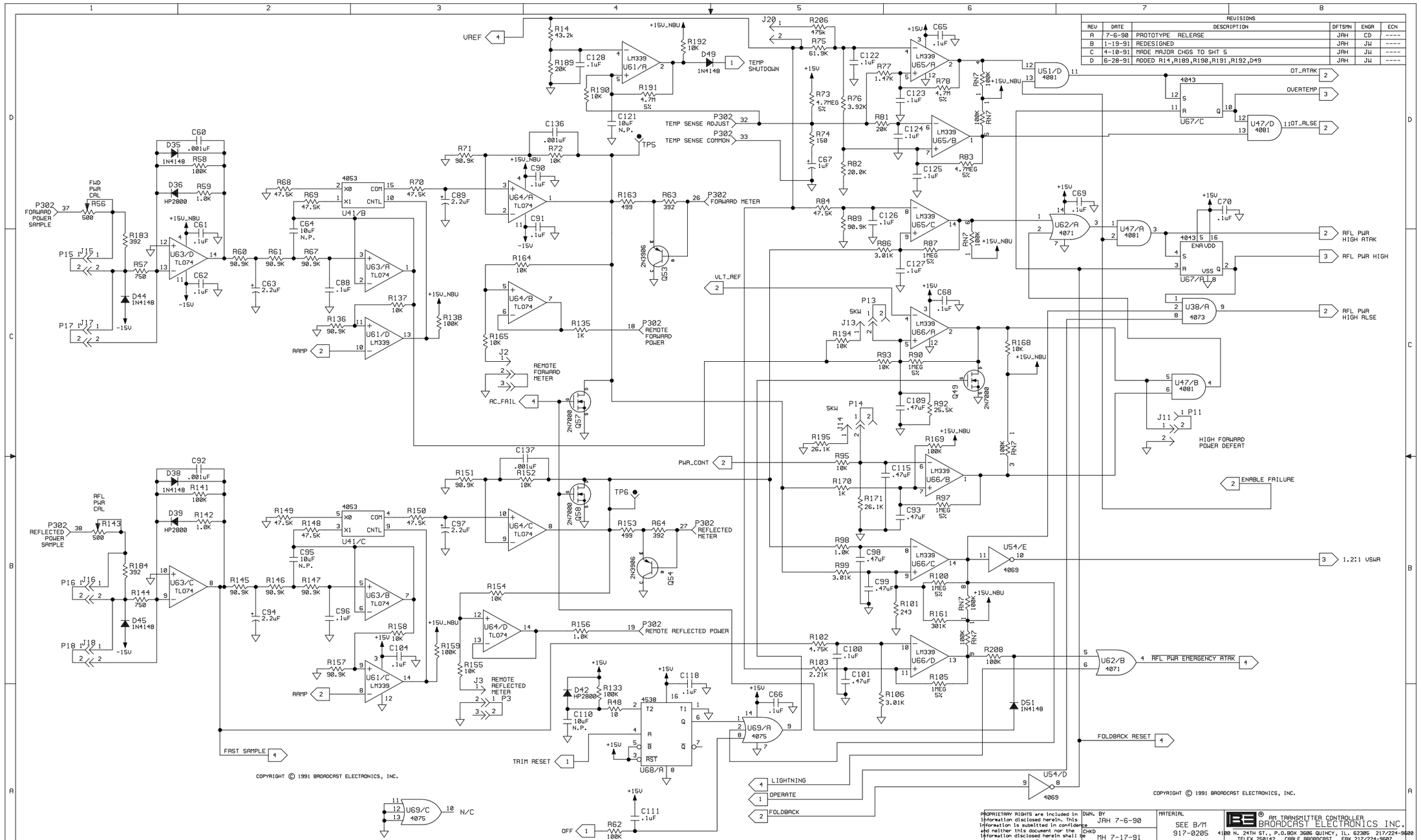

REVISIONS					
REV	DATE	DESCRIPTION	DFTSMN	ENGR	ECN
A	7-6-90	PROTOTYPE RELEASE	JAH	CD	----
B	1-19-91	REDESIGNED	JAH	JW	----
C	4-10-91	MADE MAJOR CHGS TO SHT 5	JAH	JW	----
D	6-28-91	ADDED R14,R189,R190,R191,R192,D49	JAH	JW	----

AC	2-16-99	MOVEDD C136 & C137.	KT	JW	10095											K	2-28-92	CHGD VALUE OF R14,R75,R189	JAH	JW	8709
AB	10-8-97	ADDED C136 & C137.	KT	JW	9871											H	12-23-91	ADDED R183,R184,J15,J16,P15,P16	JAH	JW	8643
Y	3-2-95	R14 WAS 44.2k;R78 & R191 WERE 1M;ADDED J20 & R206.	JLF	JW	9346	T	3-20-93	C100 WAS .1uF.	MH	JW	8927	G	12-5-91	ADDED R194,R195,J13,J14,P13,P14,D51,D52	JAH	JW	8623
V	10-24-93	C100 WAS .01uF;R106 WAS 2.32K;CONNECTED U69 PINS 11, 12 & 13 TO GND.	MH	BG	9096	R	2-9-93	DELETED D52; ADDED R208.	MH	JW	8897	F	11-2-91	CHGD R159,R138,R192,RN7 TO +15V NBU	JAH	JW	8598
						N	2-3-93	R153 & R163 WERE 604 OHMS.	MH	JW	8876	E	8-8-91	ADDED C120-C127,Q57,Q58	JAH	JW	8556
U	7-2-93	C100 WAS 68pF;C121 WAS .1uF;R106 WAS 5.76K.	MH	JW	8999	M	1-27-93	R106 WAS 3.01K;ADDED J17/P17 & J18/P18.	MH	JW	8840	-	7-17-91	ENGINEERING RELEASE	JAH	JW	----

PROPRIETARY RIGHTS are included in information disclosed herein. This information is submitted in confidence and neither this document nor the information disclosed herein shall be reproduced or transferred to other documents or used or disclosed to others for manufacturing or for any other purpose except as specifically authorized in writing by BROADCAST ELECTRONICS, INC.

TOLERANCE (DECIMAL) U.O.S.
.x ± .030 .xxx ± .005
.xx ± .015 ANGLES ± 1°

DWN. BY JAH 7-6-90
CHKD MH 7-17-91
ME
PROJ. ENGR. JW 7-17-91
MFG.

MATERIAL SEE B/M 917-0205
FINISH SEE DWG RA592-0000
NEXT ASSY. AC 917-0205

AM TRANSMITTER CONTROLLER
BROADCAST ELECTRONICS INC.
4100 N. 24TH ST., P.O.BOX 3606 QUINCY, IL. 62305 217/224-9600
TELEX 250142 CABLE BROADCAST FAX 217/224-9607

TITLE ECU CONTROLLER

TYPE S | SIZE B | DWG. NO. 917-0205 | REV AK

MODEL AM-1/2.5/5 | SCALE NONE | SHEET 5 OF 5

REVISIONS					
REV	DATE	DESCRIPTION	DFTSMN	ENGR	ECN
U	7-23-93	C100 WAS 000-6814,C121 WAS 003-1054,R106 WAS 103-5764; DELETED C119,D46,Q56,R178,R182 & R206; ADDED R209 & R210; MOVED R50,R52,R94,R134,R189 & R191.	MH	JW	8999
V	9-19-93	C1-C33,C36,C37,C39-C48,C50,C53,C57,C59,C61,C62,C65, C66,C68-C71,C74,C88,C90,C91,C96,C102,C104,C105,C107, C111-C114,C117,C118,C122-C128,C133 & C134 CHGD TO 003-1066.	MH	JW	9051
W	10-24-93	CHGD C100 TO 003-1066 & R106 TO 103-3014.	MH	BG	9096
X	8-5-94	CHGD C132 TO 024-3374 & R179 TO 103-1062.	MH	JW	9221
Y	3-3-95	R14 WAS 103-4425; R78 & R191 WERE 103-1007. ADDED R206 & J20.	JLF	JW	9346
AA	9-10-97	DEL D43 & R180; ADDED C135; CHGD R179 TO 100-1041.	KT	JW	9842
AB	10-9-97	ADDED C136 & C137	KT	JW	9871

REVISIONS					
REV	DATE	DESCRIPTION	DFTSMN	ENGR	ECN
A	6-7-90	PROTOTYPE RELEASE	JAH	CD	----
B	1-22-91	REDESIGNED	JAH	JW	----
C	5-18-91	MAJOR RELOCATION OF COMPONENTS	JAH	JW	----
D	6-20-91	MINOR CHGS ADD ADDITIONS	JAH	JW	----
-	7-17-91	ENGINEERING RELEASE	JAH	JW	----
E	8-12-91	ADDED C121-C129,D50	JAH	JW	8556
F	11-5-91	ADDED R193 ADD 2 400-2175	JAH	JW	8598
G	12-5-91	ADDED R194,R195,J13,J14,P13,P14,D51,D52	JAH	JW	8623
H	12-30-91	ADDED R197-R200,C130-C132,D53-D56 DEL C120,R185-R187	JAH	JW	8643
J	2-8-92	ADDED R187,D47,D48	JAH	JW	8692
K	2-28-92	CHGD VALUE OF R14,R75,R88,R189	JAH	JW	8709
L	7-9-92	CHGD VALUE OF C131,C132,R200;ADDED R201	MH	JW	8770
M	2-3-93	R106 WAS 103-3014, ADDED D57-D60,J/P17-19,Q59&R202.	MH	JW	8840
N	2-8-93	R153 & R163 WERE 100-6031;ADDED D61,D62 & R203.	MH	JW	8876
P	2-9-93	ADDED C133,C134,R204 & R205.	MH	JW	8887
R	2-9-93	DELETED D52;ADDED R208.	MH	JW	8897
S	2-11-93	Q55 WAS 212-0310;ADDED D63,D64,R206 & R207; MOVED C118 & R187.	MH	JW	8898
T	3-20-93	CHANGED LEAD SPACING OF C100.	MH	JW	8927

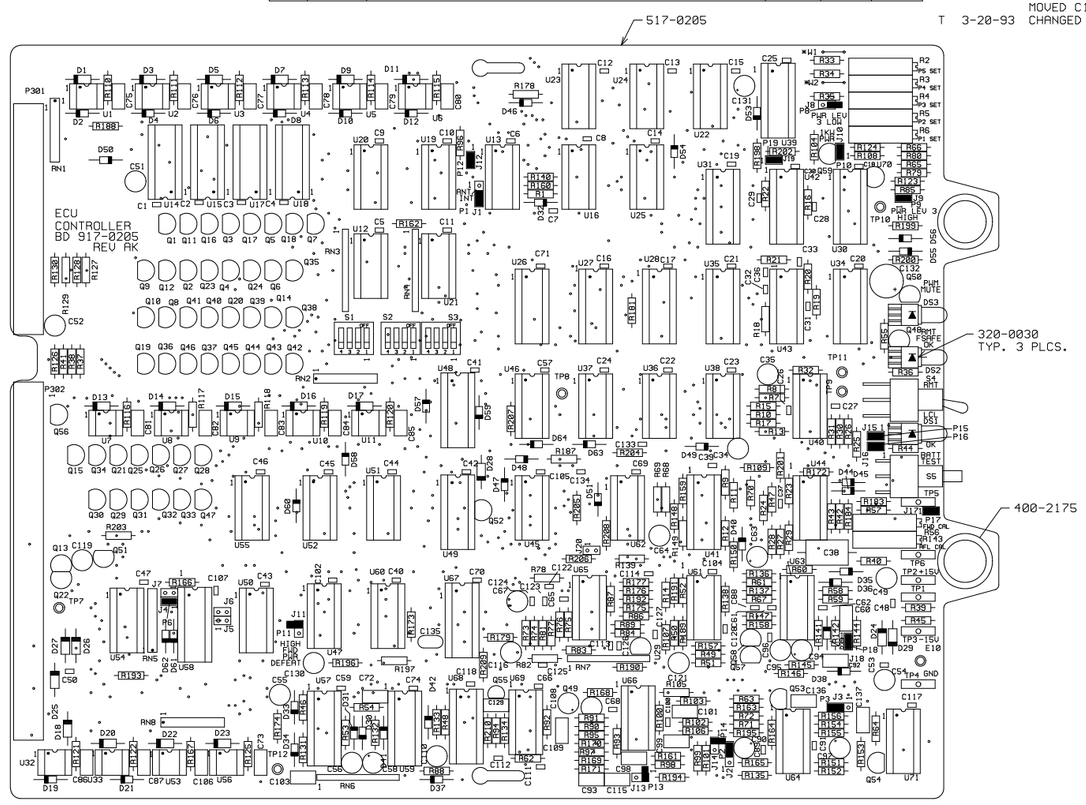

NOTES:
1. SEE SCHEMATIC SB 917-0205
2. * INDICATES W1 & W2 ARE NOT NORMALLY USED,
   INSTALL W1 IF POWER LEVEL 5 IS BELOW STANDARD,
   INSTALL W2 IF POWER LEVEL 4 IS BELOW STANDARD

COPYRIGHT © 1991 BROADCAST ELECTRONICS, INC.

COPYRIGHT © 1991 BROADCAST ELECTRONICS, INC.

AK	3-8-04	ADDED C119, D46 & R178	KT		11102
AJ	1-14-03	ADDED W1,W2 AND NOTE 2	KT	JW	11075
AH	10-30-00	CHGD R124 FROM 103-6344 TO 103-6814	KT	JW	10372
AG	7-28-00	CHGD R18 FROM A 103-1744 TO A 100-1041.	KT	JW	10325
AF	3-31-00	C133 & C134 WERE 003-1066	KT	JW	10292
AE	8-20-99	CHGD R124 FROM A 103-5764 TO A 103-6344.	KT	JW	10176
AD	5-24-99	ADDED Q56	KT	JW	10148
AC	2-16-99	CHGD NETS OF C136 & C137 PIN 2.	KT	JW	10095

PROPRIETARY RIGHTS are included in information disclosed herein. This information is submitted in confidence and neither this document nor the information disclosed herein shall be reproduced or transferred to other documents or used or disclosed to others for manufacturing or for any other purpose except as specifically authorized in writing by BROADCAST ELECTRONICS, INC.

TOLERANCE (DECIMAL) U.O.S.
.X ± .030 .XXX ± .005
.XX ± .015 ANGLES ± 1°

DWN. BY JAH 1-22-91
CHKD MH 5-20-91
ME
PROJ. ENGR. JW 7-17-91
MFG.

MATERIAL SEE B/M 917-0205
FINISH -----
~~SEE DWG AA592-0000~~
NEXT ASSY. -----

BROADCAST ELECTRONICS INC.
4100 N.24TH ST. P.O.BOX 3606 QUINCY,IL. 62305 PH. 217/224-9600
TELEX 250142 CABLE BROADCAST FAX 217/224-9607

TITLE PCB ASSEMBLY
ECU CONTROLLER BD

TYPE	SIZE	DWG No.	REV
A	C	917-0205	AK

MODEL AM-1/2.5/5 SCALE 1=1 SHEET 1 OF 1

REVISIONS					
REV	DATE	DESCRIPTION	DFTSMN	ENGR	ECN
1	11-28-95	PROTOTYPE RELEASE	MERK	JW	——
2	1-30-96	ADDED D1 (SHEET 2)	MERK	JW	——
A	8-13-96	ENGINEERING RELEASE WITHOUT CHANGE.	MH	JW	----
B	3-14-97	DELETED R12-R14;UPDATED NOTES;ALSO SEE SHEET 2.	MH	JW	9757
C	12-17-97	SEE SHEET 2.	KT	JW	9914
E	11-13-02	MARKED R11 AS NOT STUFFED	KT	JW	10027

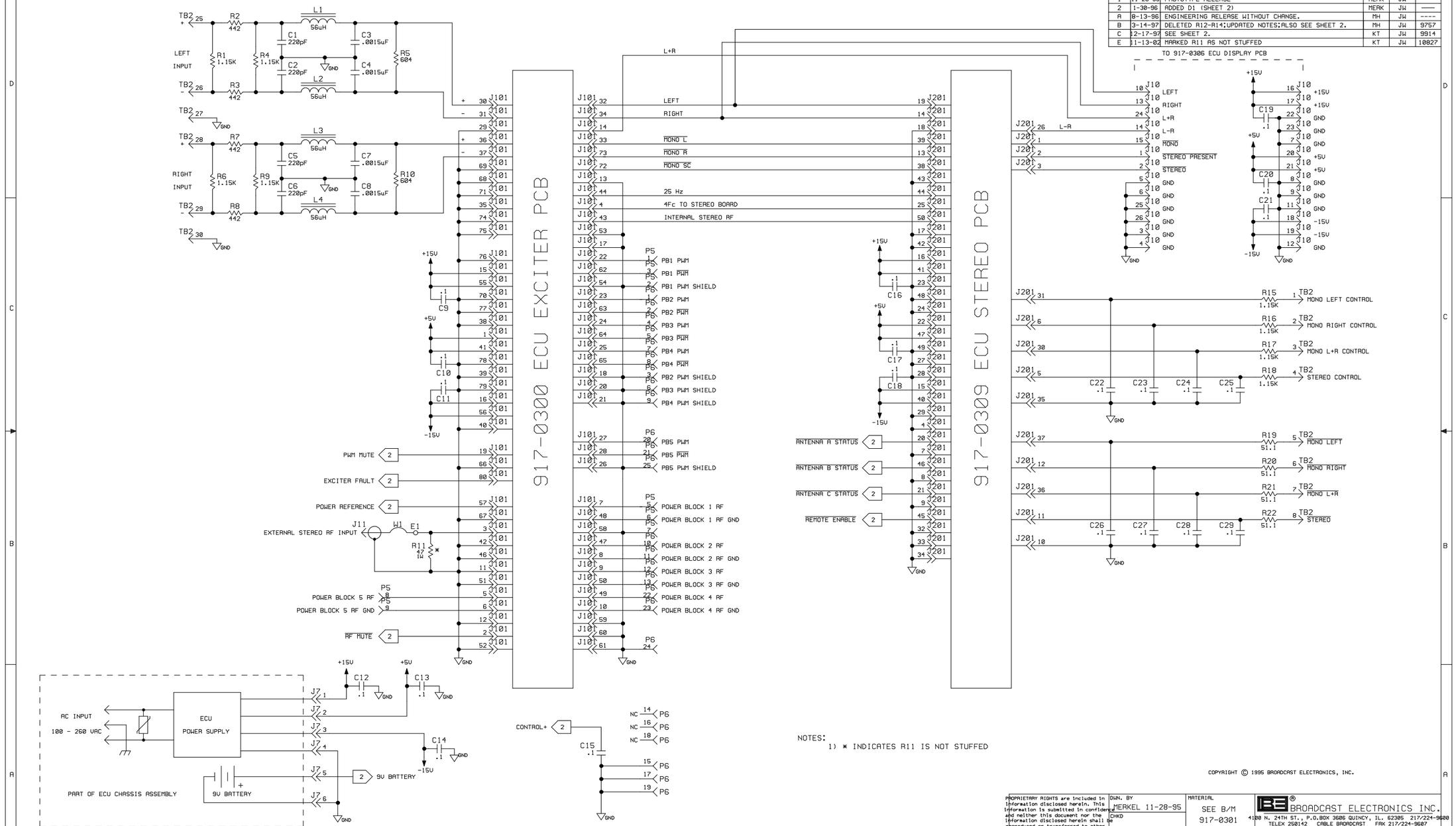

NOTES:
1) * INDICATES R11 IS NOT STUFFED

COPYRIGHT © 1995 BROADCAST ELECTRONICS, INC.

F	5-12-04	CHGD C1-C8 & L1-L4	KT	11151

PROPRIETARY RIGHTS are included in information disclosed herein. This information is submitted in confidence and neither this document nor the information disclosed herein shall be reproduced or transferred to other documents or used or disclosed to others for manufacturing or for any other purpose except as specifically authorized in writing by BROADCAST ELECTRONICS, INC.

TOLERANCE (DECIMAL) U.O.S.
.x ± .030 .xxx ± .005
.xx ± .015 ANGLES ± 1°

DWN. BY MERKEL 11-28-95
CHKD
ME
PROJ. ENGR. JW 8-16-96
MFG.

MATERIAL SEE B/M 917-0301
FINISH
~~SEE DWG RAG92-0080~~
NEXT ASSY.

BROADCAST ELECTRONICS INC.
4100 N. 24TH ST., P.O.BOX 3606 QUINCY, IL. 62305 217/224-9600
TELEX 250142 CABLE BROADCAST FAX 217/224-9607

TITLE SCHEMATIC ECU MOTHERBOARD

TYPE	SIZE	DWG. NO.	REV
S	B	917-0301	F

MODEL AM1A SCALE NONE SHEET 1 OF 2

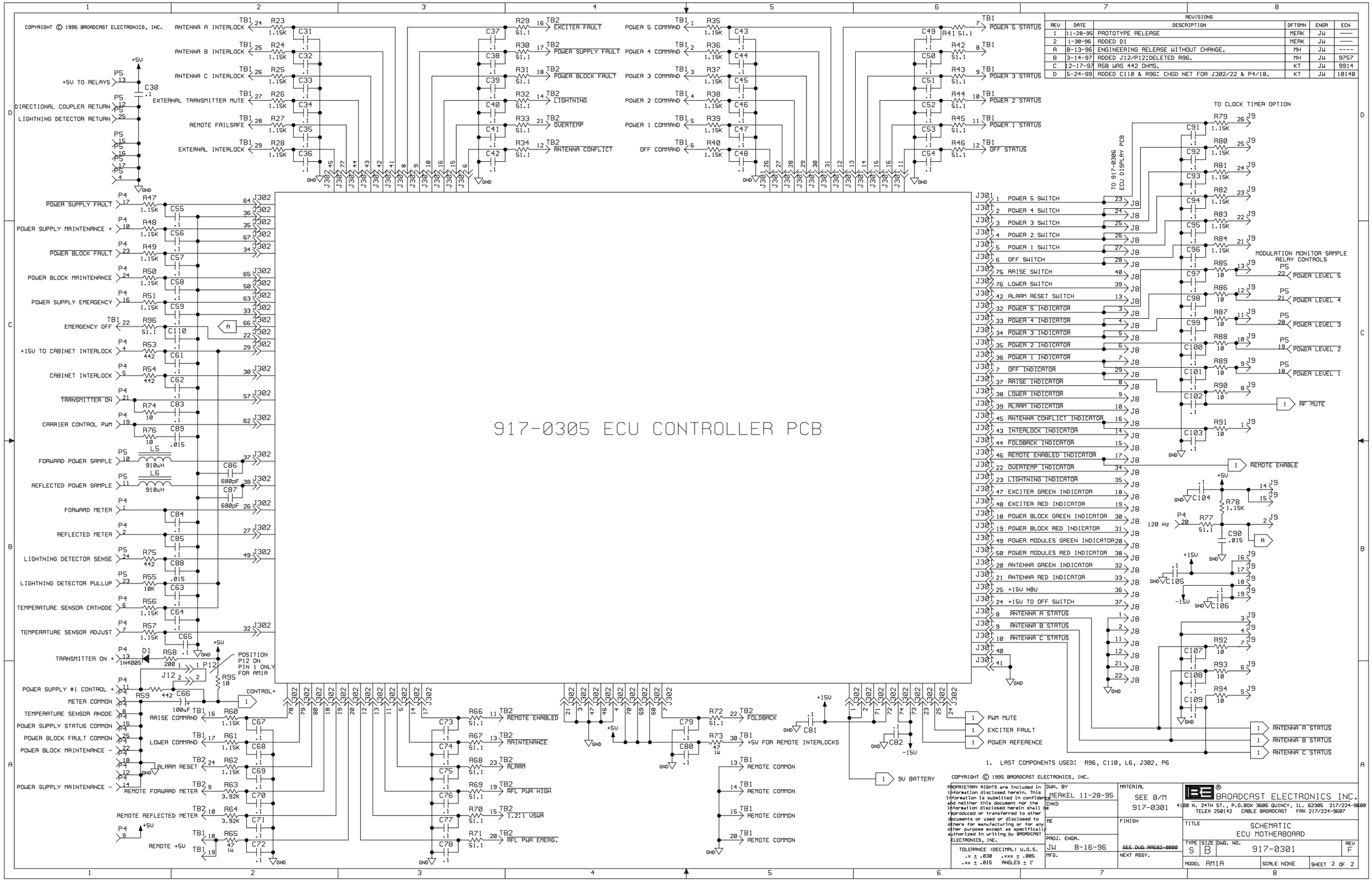

REVISIONS					
REV	DATE	DESCRIPTION	DFTSMN	ENGR	ECN
1	11-28-95	PROTOTYPE RELEASE	MERK	JW	——
2	1-30-96	ADDED D1	MERK	JW	——
A	8-13-96	ENGINEERING RELEASE WITHOUT CHANGE.	MH	JW	----
B	3-14-97	ADDED J12/P12;DELETED R96.	MH	JW	9757
C	12-17-97	R58 WAS 442 OHMS.	KT	JW	9914
D	5-24-99	ADDED C110 & R96; CHGD NET FOR J302/22 & P4/18.	KT	JW	10148

COPYRIGHT © 1995 BROADCAST ELECTRONICS, INC.

REVISIONS					
REV	DATE	DESCRIPTION	DFTSMN	ENGR	ECN
1	11-28-95	PROTOTYPE RELEASE	MERK	JW	----
2	1-30-96	ADDED D1	MERK	JW	----
A	8-13-96	ENGINEERING RELEASE WITHOUT CHANGE.	MH	JW	----
B	3-14-97	ADDED J12/P12;DELETED R12-R14 & R96;MOVED R48 & R49.	MH	JW	9757
C	3-24-97	C66 WAS 020-1083.	MSE	JW	9783
D	12-17-97	CHGD R58 TO A 103-2003.	KT	JW	9914
E	5-25-99	ADDED C110 & R96;CHGD NET FOR J302/22 & P4/18.	KT	JW	10148
F	11-13-02	MARKED R11 AS NOT STUFFED	KT	JW	10827
G	5-12-04	CHGD C1-C8 & L1-L4	KT		11151

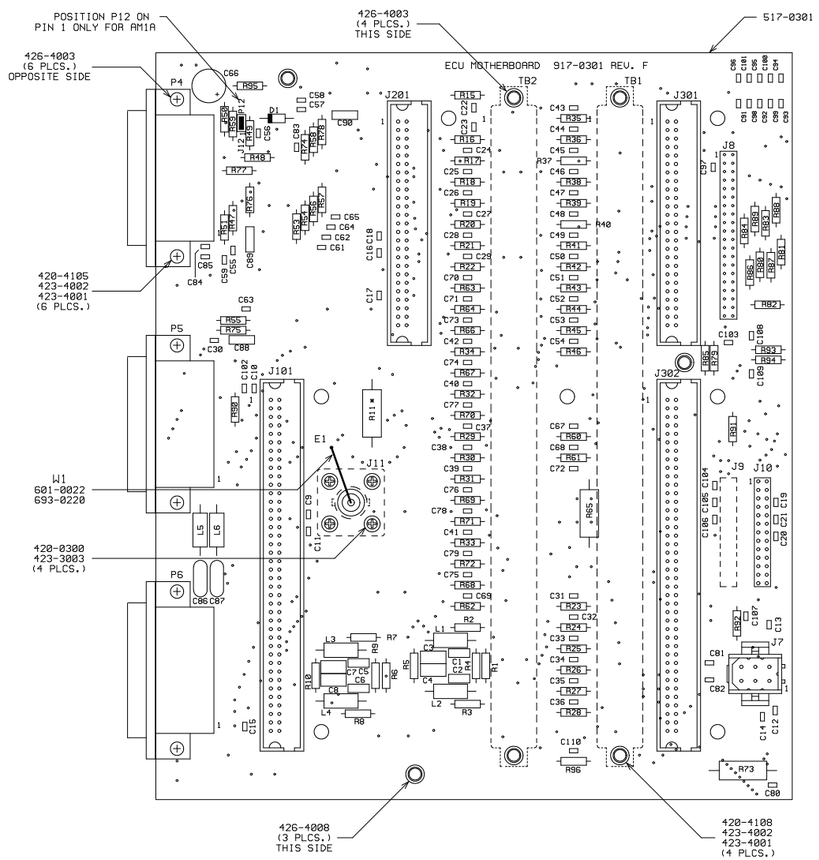

NOTES:
1. ALL PARTS SHOWN WITH DASHED LINES TO BE MOUNTED FROM OPPOSITE SIDE.
2. TAPE TO BE PLACED OVER MOUNTING HOLES OF J9, J11, TB1, & TB2 BEFORE SOLDER REFLOW.
3. * INDICATES R11 IS NOT STUFFED

COPYRIGHT © 1995 BROADCAST ELECTRONICS, INC.

PROPRIETARY RIGHTS are included in information disclosed herein. This information is submitted in confidence and neither this document nor the information disclosed herein shall be reproduced or transferred to other documents or used or disclosed to others for manufacturing or for any other purpose except as specifically authorized in writing by BROADCAST ELECTRONICS, INC.

TOLERANCE (DECIMAL) U.O.S.
.X ± .030 .XXX ± .005
.XX ± .015 ANGLES ± 1°

DWN. BY MERKEL 11-28-95
CHKD
ME
PROJ. ENGR. JW 8-16-96
MFG.

MATERIAL SEE BOM 917-0301
FINISH ~~SEE DWG AA592-0000~~
NEXT ASSY.

BROADCAST ELECTRONICS INC.
4100 N.24TH ST. P.O.BOX 3606 QUINCY,IL. 62305 PH. 217/224-9600
TELEX 250142 CABLE BROADCAST FAX 217/224-9607

TITLE ASSEMBLY ECU MOTHERBOARD

TYPE	SIZE	DWG No.	REV
A	C	917-0301	F

MODEL AM1A SCALE 1:1 SHEET 1 OF 1

M	11-13-02	ADDED J14-J19,P14-P19,C177 & C178	KT	JW	10827
N	3-12-03	ADDED J20,P20,R229 & R230; SEE SHEET 2 ALSO	KT	JW	10918
P	5-11-04	DEL JP2,JP3; ADD JP22;CHGD C42-C44,C46-C48,C50-C52,R43-R51	KT	JW	11151
R	7-14-04	TIE R8 NET TO R10 NET & R23 NET TO R25 NET	KT	JW	11195
T	1-10-05	CHGD JUMPER SETTINGS FOR JP18 & JP19	KT	JW	11232
U	3-1-05	CHGD R229 TO 1K	KT		11252
V	6-27-06	CHGD C90 TO .1uF(003-1066)	JTB		11443

REVISIONS

REV	DATE	DESCRIPTION	DFTSMN	ENGR	ECN
1	11-20-95	PROTOTYPE RELEASE	MERK	JW	----
2	1-25-96	SEE SHEET 2.	MH	JW	----
3	6-26-96	SEE SHEET 4.	MH	JW	----
A	8-9-96	ENGINEERING RELEASE WITHOUT CHANGE.	MH	JW	----
B	1-22-97	SEE SHEET 2.	KT	JW	9791
C	10-13-97	SEE SHEET 2.	KT	JW	9870
D	2-26-98	ADDED TP19;ALSO SEE SHEET 2.	MH	JW	9940
E	7-20-98	SHEET 2.	MSE	JW	9990
F	1-25-99	SHEET 2.	KT	JW	10082
G	2-21-00	SHEET 4.	KT	JW	10263
H	4-5-01	CHGD U3,U6,U8,U9 TO TL072, SEE SHEETS 2-4 ALSO	KT	JW	10428

COPYRIGHT © 1996 BROADCAST ELECTRONICS, INC.

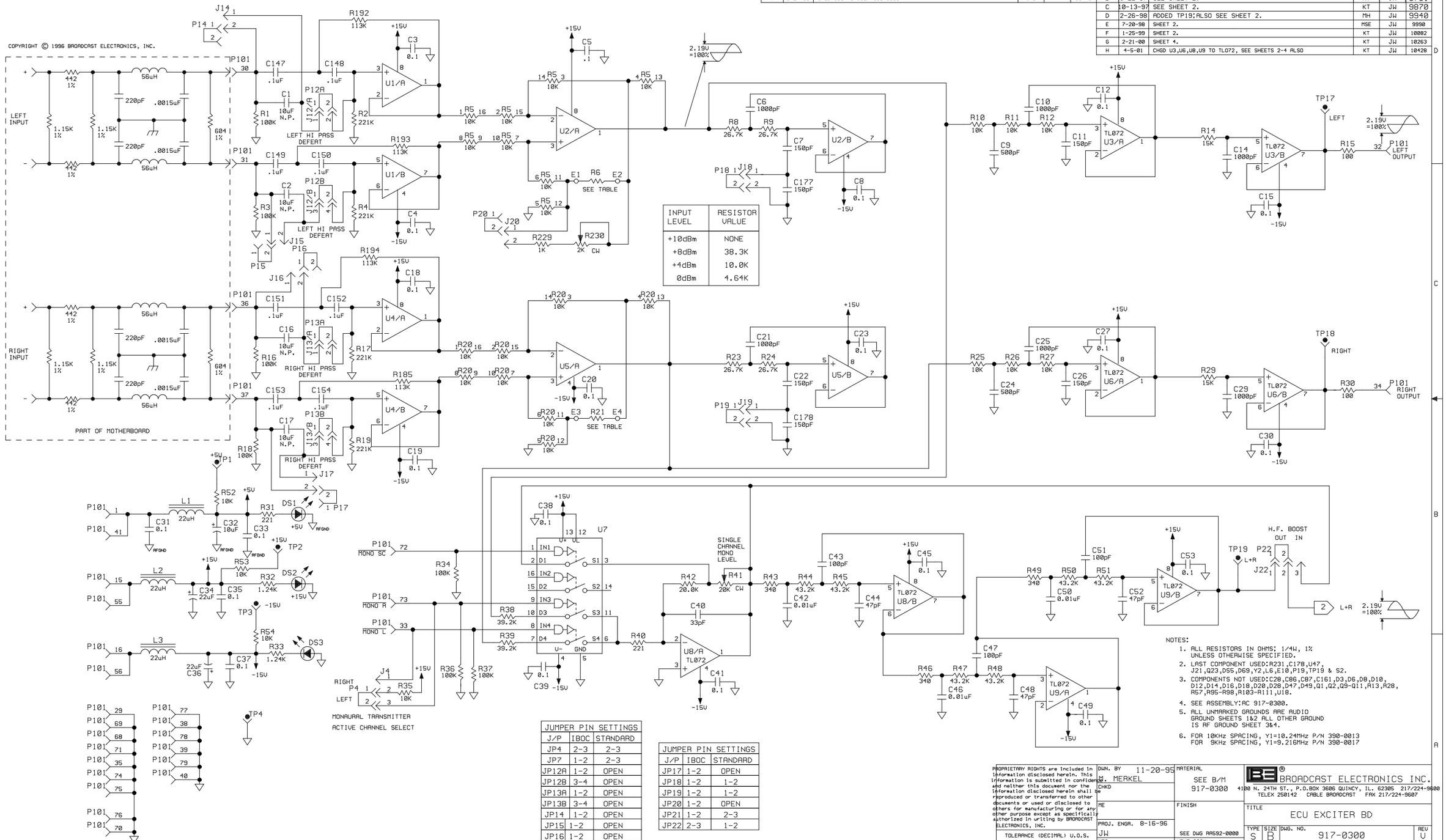

INPUT LEVEL	RESISTOR VALUE
+10dBm	NONE
+8dBm	38.3K
+4dBm	10.0K
0dBm	4.64K

NOTES:

1. ALL RESISTORS IN OHMS; 1/4W, 1% UNLESS OTHERWISE SPECIFIED.
2. LAST COMPONENT USED:R231,C178,U47, J21,Q23,D55,D69,Y2,L6,E10,P19,TP19 & S2.
3. COMPONENTS NOT USED:C28,C86,C87,C161,D3,D6,D8,D10, D12,D14,D16,D18,D20,D28,D47,D49,Q1,Q2,Q9-Q11,R13,R28, R57,R95-R98,R103-R111,U18.
4. SEE ASSEMBLY:AC 917-0300.
5. ALL UNMARKED GROUNDS ARE AUDIO GROUND SHEETS 1&2 ALL OTHER GROUND IS RF GROUND SHEET 3&4.
6. FOR 10KHz SPACING, Y1=10.24MHz P/N 390-0013 FOR 9KHz SPACING, Y1=9.216MHz P/N 390-0017

JUMPER PIN SETTINGS		
J/P	IBOC	STANDARD
JP4	2-3	2-3
JP7	1-2	2-3
JP12A	1-2	OPEN
JP12B	3-4	OPEN
JP13A	1-2	OPEN
JP13B	3-4	OPEN
JP14	1-2	OPEN
JP15	1-2	OPEN
JP16	1-2	OPEN

JUMPER PIN SETTINGS		
J/P	IBOC	STANDARD
JP17	1-2	OPEN
JP18	1-2	1-2
JP19	1-2	1-2
JP20	1-2	OPEN
JP21	1-2	2-3
JP22	2-3	1-2

PROPRIETARY RIGHTS are included in information disclosed herein. This information is submitted in confidence and neither this document nor the information disclosed herein shall be reproduced or transferred to other documents or used or disclosed to others for manufacturing or for any other purpose except as specifically authorized in writing by BROADCAST ELECTRONICS, INC.

TOLERANCE (DECIMAL) U.O.S.
.x ± .030 .xxx ± .005
.xx ± .015 ANGLES ± 1°

DWN. BY 11-20-95 M. MERKEL
CHKD
ME
PROJ. ENGR. 8-16-96 JW
MFG.

MATERIAL SEE B/M 917-0300
FINISH
SEE DWG RA592-0000
NEXT ASSY.

BROADCAST ELECTRONICS INC.
4100 N. 24TH ST., P.O.BOX 3606 QUINCY, IL. 62305 217/224-9600
TELEX 250142 CABLE BROADCAST FAX 217/224-9687

TITLE ECU EXCITER BD

TYPE	SIZE	DWG. NO.	REV
S	B	917-0300	V

MODEL AM-1A SCALE NONE SHEET 1 OF 4

COPYRIGHT © 1996 BROADCAST ELECTRONICS, INC.

K	4-5-01	CHGD U14-U17 TO TL072	KT	JW	10428
L	2-5-02	ADDED C13	KT	JW	10622
N	3-12-03	ADDED J21,P21 & R231	KT	JW	10918
R	7-14-04	CHGD R63 FROM 34K TO 32.4K	KT	JW	11185
V	6-27-06	CHGDC90 TO .1uF(003-1066)	JTB		11443

REVISIONS

REV	DATE	DESCRIPTION	DFTSMN	ENGR	ECN
1	11-20-95	PROTOTYPE RELEASE	MERK	JW	----
2	1-25-96	CHANGED C167 TO 1uF NON-POLARIZED.	MH	JW	----
A	8-9-96	ENGINEERING RELEASE WITHOUT CHANGE.	MH	JW	----
B	1-22-97	ADDED C173,D64,D65,Q23,R212 & R213.	KT	JW	9791
C	10-13-97	ADDED C174-176,D66,D67,R214-217 & U47.	KT	JW	9870
D	2-26-98	R217 WAS 1K.	MH	JW	9940
E	7-20-98	REMOVE +15V FROM PIN 10 ON U47/B	MSE	JW	9990
F	1-25-99	ADDED D68 & D69.	KT	JW	10082
J	3-23-00	D7,D9,D11,D13,D15,D17,D19,D21,D48,D50 WERE 201-2800 DEL D6,D8,D10,D12,D14,D16,D18,D20,D47 & D49; ADDED R219-228	KT	JW	10284

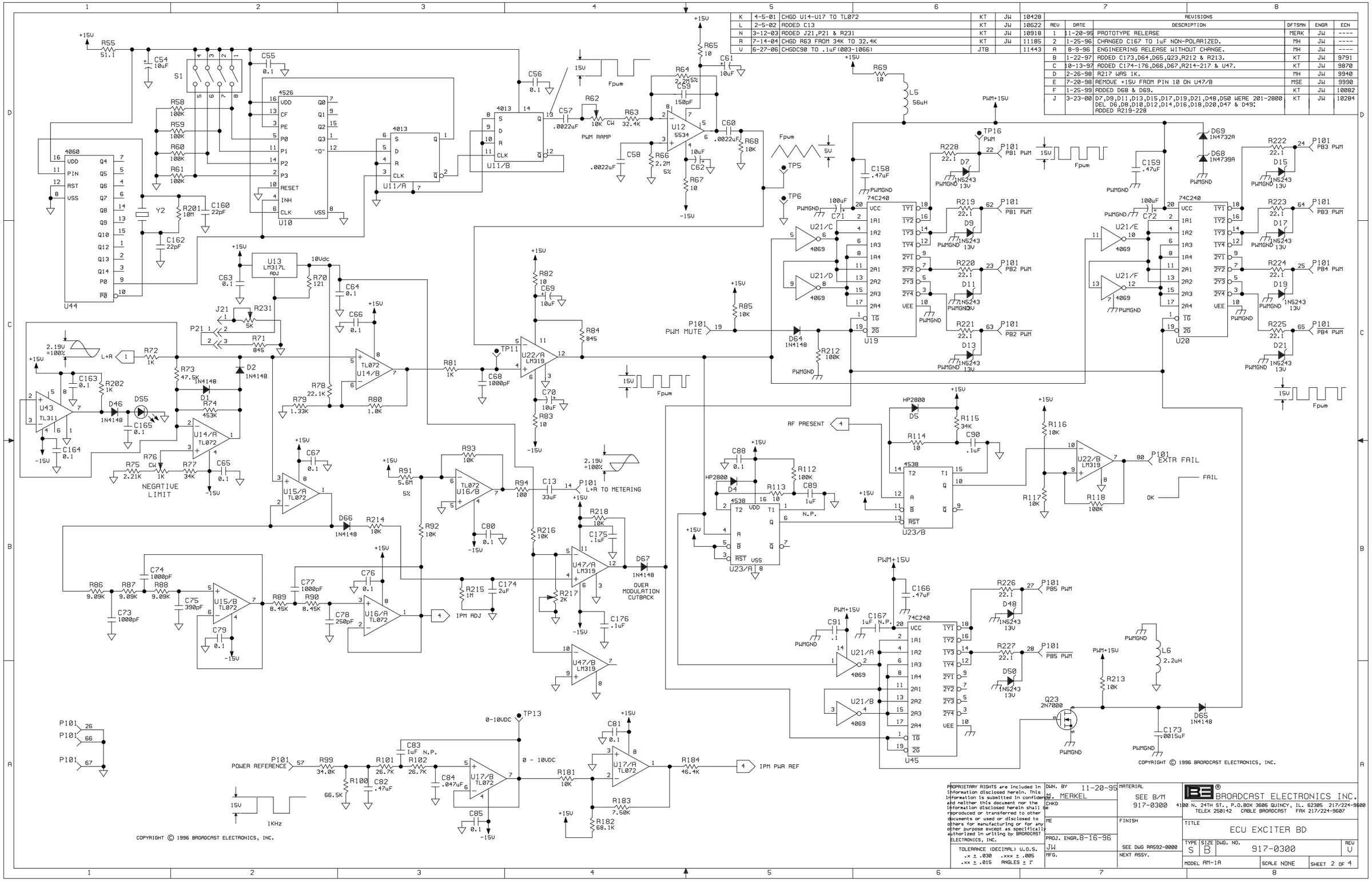

PROPRIETARY RIGHTS are included in information disclosed herein. This information is submitted in confidence and neither this document nor the information disclosed herein shall be reproduced or transferred to other documents or used or disclosed to others for manufacturing or for any other purpose except as specifically authorized in writing by BROADCAST ELECTRONICS, INC.

TOLERANCE (DECIMAL) U.O.S.
.x ± .030 .xxx ± .005
.xx ± .015 ANGLES ± 1°

DWN. BY M. MERKEL 11-20-95
CHKD
ME
PROJ. ENGR. JW 8-16-96
MFG.

MATERIAL SEE B/M 917-0300
FINISH SEE DWG AA592-0000
NEXT ASSY.

BROADCAST ELECTRONICS INC.
4100 N. 24TH ST., P.O.BOX 3606 QUINCY, IL. 62305 217/224-9600
TELEX 250142 CABLE BROADCAST FAX 217/224-9607

TITLE ECU EXCITER BD

TYPE	SIZE	DWG. NO.	REV
S	B	917-0300	V

MODEL AM-1A SCALE NONE SHEET 2 OF 4

REVISIONS					
REV	DATE	DESCRIPTION	DFTSMN	ENGR	ECN
1	11-20-95	PROTOTYPE RELEASE	MERK	JW	----
A	8-9-96	ENGINEERING RELEASE WITHOUT CHANGE.	MH	JW	----
B	1-22-97	SEE SHEET 2.	KT	JW	9791
K	4-5-01	CHGD U26 TO TL072	KT	JW	10428
V	6-27-06	CHGD C90 .1uF(003-1066)	JTB		11443

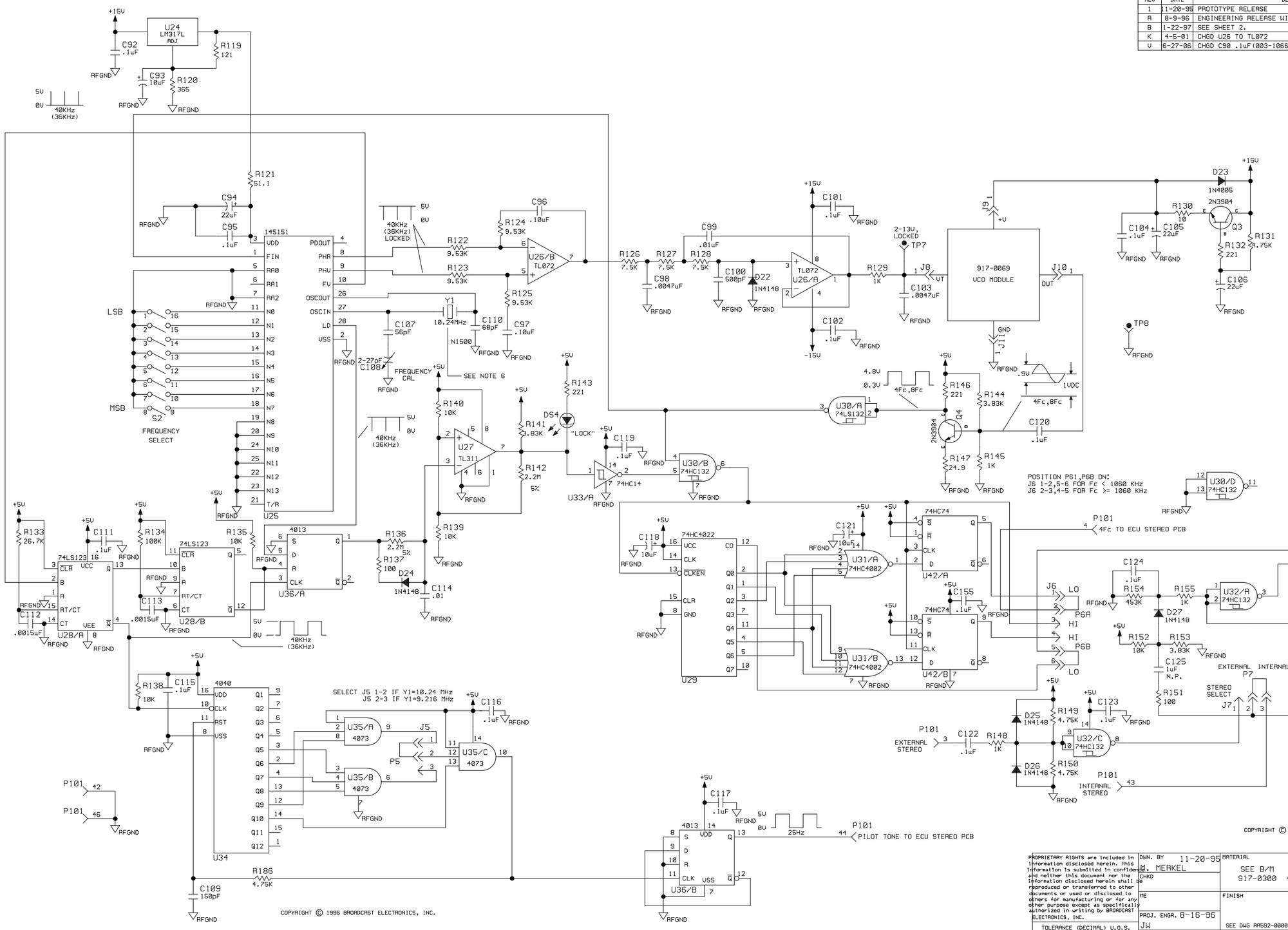

PROPRIETARY RIGHTS are included in information disclosed herein. This information is submitted in confidence and neither this document nor the information disclosed herein shall be reproduced or transferred to other documents or used or disclosed to others for manufacturing or for any other purpose except as specifically authorized in writing by BROADCAST ELECTRONICS, INC.

TOLERANCE (DECIMAL) U.O.S.
.x ± .030 .xx ± .005
.xx ± .015 ANGLES ± 1°

DWN. BY J. MERKEL 11-20-95
CHKD
ME
PROJ. ENGR. JW 8-16-96
MFG.

MATERIAL SEE B/M 917-0300
FINISH
SEE DWG RA592-0000
NEXT ASSY.

BROADCAST ELECTRONICS INC.
4100 N. 24TH ST., P.O.BOX 3606 QUINCY, IL. 62305 217/224-9600
TELEX 250142 CABLE BROADCAST FAX 217/224-9607

TITLE ECU EXCITER BD

TYPE	SIZE	DWG. NO.	REV
S	B	917-0300	V

MODEL AM-1A SCALE NONE SHEET 3 OF 4

REVISIONS					
REV	DATE	DESCRIPTION	DFTSMN	ENGR	ECN
1	11-20-95	PROTOTYPE RELEASE	MERK	JW	----
3	6-26-96	CHGD VALUE OF R195 & R200.	MH	JW	----
A	8-9-96	ENGINEERING RELEASE WITHOUT CHANGE.	MH	JW	----
B	1-22-97	SEE SHEET 2.	KT	JW	9791
G	2-21-00	Q13-Q22 WERE 210-0088, U46 WAS A 227-2112	KT	JW	10263
H	3-23-00	ADDED R56	KT	JW	10276
K	4-5-01	CHGD U41 TO TL072	KT	JW	10428
V	6-27-06	CHGD C90 .1uF(003-1066)	JTB		11443

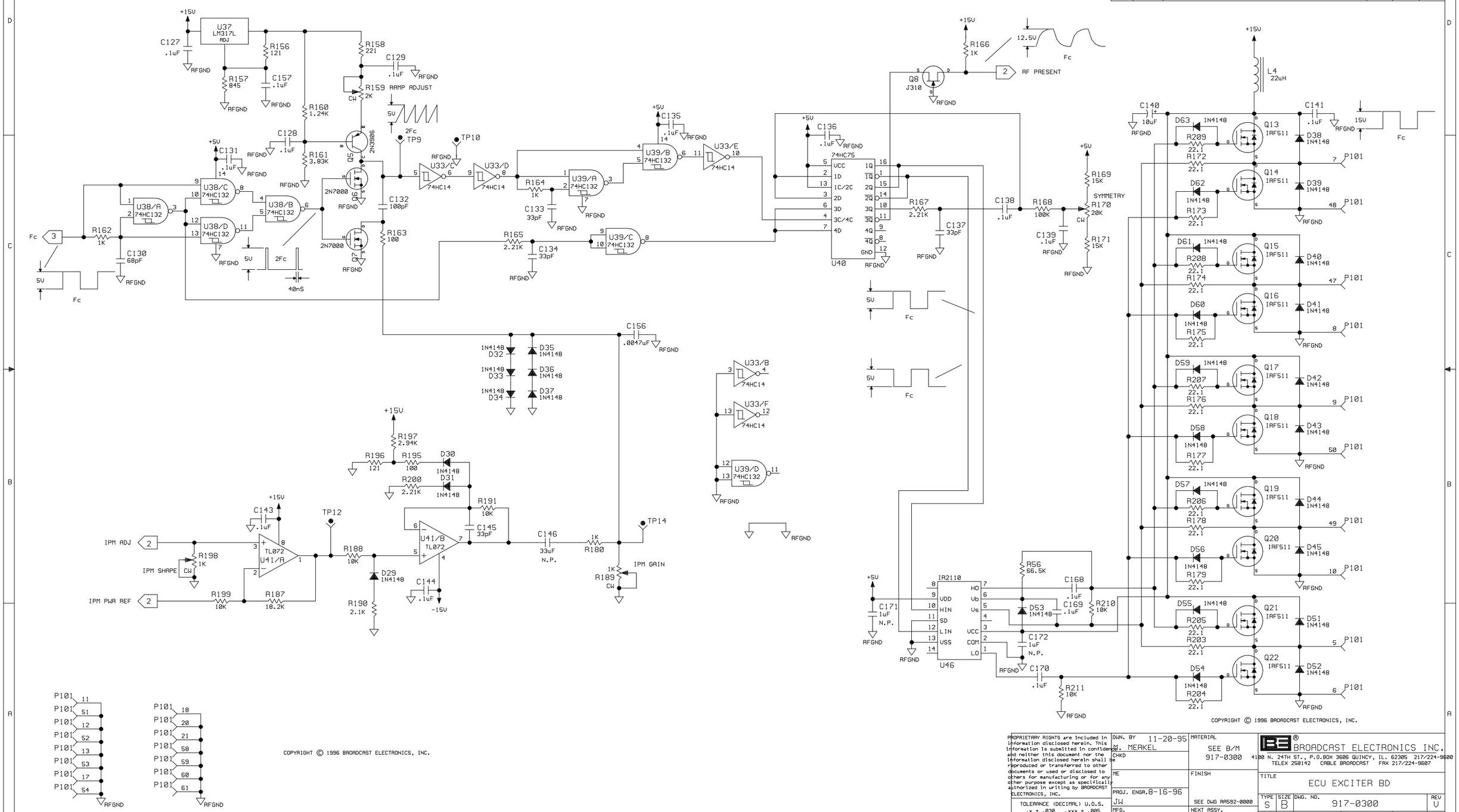

PROPRIETARY RIGHTS are included in information disclosed herein. This information is submitted in confidence and neither this document nor the information disclosed herein shall be reproduced or transferred to other documents or used or disclosed to others for manufacturing or for any other purpose except as specifically authorized in writing by BROADCAST ELECTRONICS, INC.

TOLERANCE (DECIMAL) U.O.S.
.x ± .030 .xxx ± .005
.xx ± .015 ANGLES ± 1°

DWN. BY 11-20-95 M. MERKEL
CHKD
ME
PROJ. ENGR. 8-16-96 JW
MFG.

MATERIAL SEE B/M 917-0300
FINISH SEE DWG RA592-0000
NEXT ASSY.

BROADCAST ELECTRONICS INC.
4100 N. 24TH ST., P.O.BOX 3606 QUINCY, IL. 62305 217/224-9600
TELEX 250142 CABLE BROADCAST FAX 217/224-9607

TITLE ECU EXCITER BD

TYPE S | SIZE B | DWG. NO. 917-0300 | REV V

MODEL AM-1A | SCALE NONE | SHEET 4 OF 4

N	4-5-01	CHGD U3,U6,U8,U9,U14-U17,U26,U41 TO TL072	KT	JW	10428
P	2-5-02	ADDED C13, MOVED R94 & L2	KT	JW	10622
R	9-6-02	ADDED NOTES TO INDICATE Y1 & Y2 ARE STUFFED IN TEST	KT	JW	10747
T	11-13-02	ADDED J14-J19,P14-P19,C177 & C178.	KT	JW	10827
U	3-12-03	ADDED J20,J21,P20,P21,R229-R231	KT	JW	10918
V	5-12-04	DEL J2,J3,P2,P3; ADD J22,P22; CHGD C42-C44,C46-C48, C50-C52,R43-R51; MOVED R72,R73,TP19	KT	JW	11151
W	7-14-04	CHGD R63; TIED NETS FROM R23 TO R25 & R8 TO R10	KT	JW	11185
Y	1-10-05	CHGD JUMPER SETTINGS FOR JP18 & JP19	KT	JW	11232
AA	3-1-05	CHGD R229 TO 100-1041	KT	JW	11252
AB	6-27-06	CHGD C90 .1uF (003-1066)	JTB		11443

REVISIONS

REV	DATE	DESCRIPTION	DFTSMN	ENGR	ECN
1	11-27-95	PROTOTYPE RELEASE	MERK	JW	——
2	1-25-96	CHANGED C167 TO 1uF NON-POLARIZED.	MH	JW	----
A	8-9-96	ENGINEERING RELEASE WITHOUT CHANGE.	MH	JW	----
B	11-27-96	320-0030 WAS 4 PLCS IN ERROR	MSE	JW	9747
C	2-21-97	C71 AND C72 WERE 020-1083	MSE	JW	9783
D	3-25-97	ADDED C173,D64,D65,Q23,R212 &R213;MOVED C72,D6 & D7	KT	JW	9791
E	10-13-97	ADDED C174-176,D66,D67,R214-217 & U47.	KT	JW	9870
F	3-2-98	ADDED TP19;R217 CHGD TO 178-2044;DELETED SHIELD/HDWR	MH	JW	9940
G	4-14-98	FIXED TRACE SHORTS ABOVE U19 & U45 ON 517-0300.	MH	JW	9965
H	7-20-98	REMOVED PIN 10 OF U47 FROM +15V	MSE	JW	9990
J	1-26-99	ADDED D68 & D69.	KT	JW	10082
K	2-21-00	Q13-Q22 WERE 210-0088, U46 WAS A 227-2112	KT	JW	10263
L	3-23-00	ADDED R56	KT	JW	10276
M	3-27-00	CHGD & MOVED D7,D9,D11,D13,D15,D17,D19,D21,D48,D50; DEL D6,D8,D10,D12,D14,D16,D18,D20,D47 & D49; ADDED R219-R228; MOVED R213	KT	JW	10284

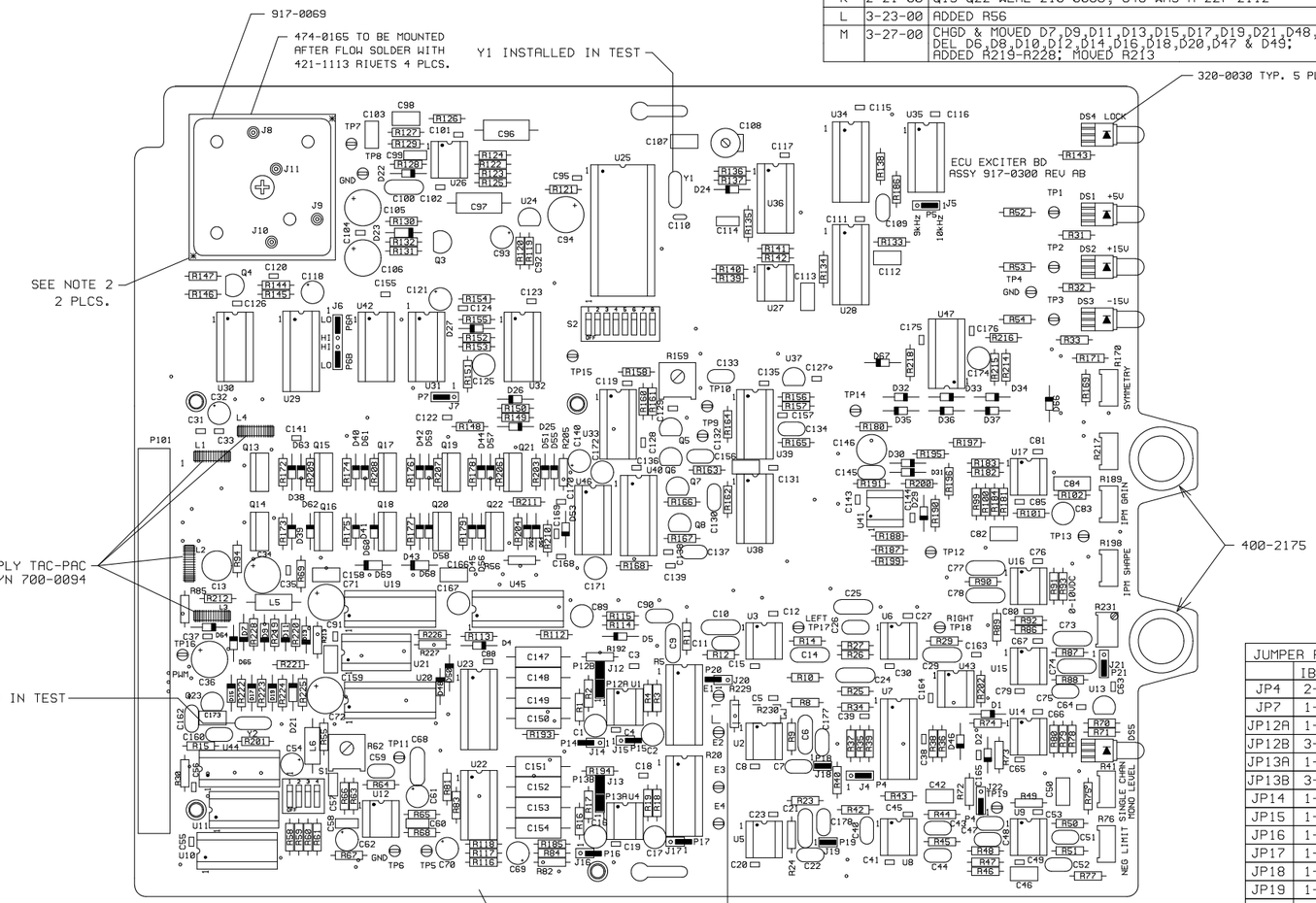

JUMPER PIN SETTINGS		
	IBOC	STANDARD
JP4	2-3	2-3
JP7	1-2	2-3
JP12A	1-2	OPEN
JP12B	3-4	OPEN
JP13A	1-2	OPEN
JP13B	3-4	OPEN
JP14	1-2	OPEN
JP15	1-2	OPEN
JP16	1-2	OPEN
JP17	1-2	OPEN
JP18	1-2	1-2
JP19	1-2	1-2
JP20	1-2	OPEN
JP21	1-2	2-3
JP22	2-3	1-2

COPYRIGHT © 1995 BROADCAST ELECTRONICS, INC.

NOTES:
1. SEE SCHEMATIC SB 917-0300.
2. * INDICATES WHERE 917-0069 IS TO BE SOLDERED TO 474-0165 2 PLCS.

COPYRIGHT © 1995 BROADCAST ELECTRONICS, INC.

PROPRIETARY RIGHTS are included in information disclosed herein. This information is submitted in confidence and neither this document nor the information disclosed herein shall be reproduced or transferred to other documents or used or disclosed to others for manufacturing or for any other purpose except as specifically authorized in writing by BROADCAST ELECTRONICS, INC.

TOLERANCE (DECIMAL) U.O.S.
.X ± .030 .XXX ± .005
.XX ± .015 ANGLES ± 1°

DWN. BY 11-27-95 M. MERKEL
DESIGNER(S)
PROJ. LEADER 8-16-96 JW
MFG.

MATERIAL SEE B/M 917-0300
FINISH
NEXT ASSY.

BROADCAST ELECTRONICS INC.
4100 N. 24TH ST. P.O.BOX 3606 QUINCY,IL. 62305
217/224-9600 FAX 217/224-9607

TITLE PCB ASSEMBLY ECU EXCITER BD

TYPE	SIZE	DWG No.	REV
A	A	917-0300	AB

MODEL AM-1A SCALE 1/1 SHEET 1 OF 1

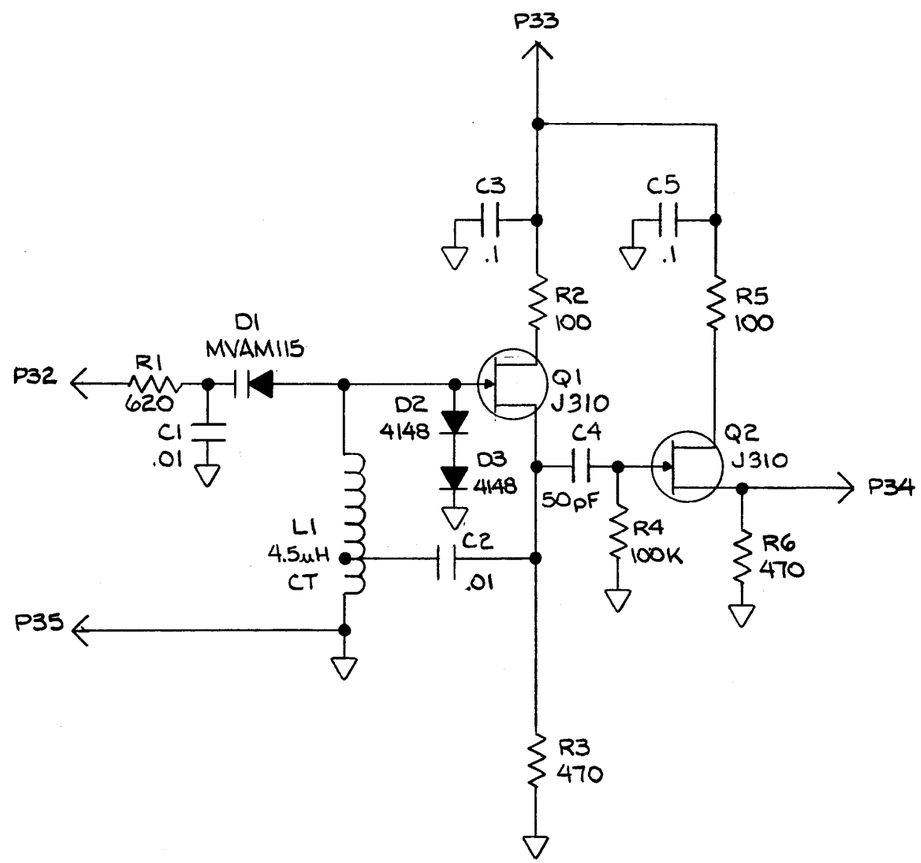

NOTES:

1) ALL RESISTORS IN OHMS, 1/4 W 5%; CAPACITORS IN MICROFARADS, U.O.S.

2) LAST COMPONENTS USED: R6, C5, D3, L1, Q2,

3) SEE ASSY AB 917-0069

COPYRIGHT © 1986 BROADCAST ELECTRONICS, INC.

PROPRIETARY RIGHTS are included in information disclosed herein. This information is submitted in confidence and neither this document nor the information disclosed herein shall be reproduced or transferred to other documents or used or disclosed to others for manufacturing or for any other purpose except as specifically authorized in writing by BROADCAST ELECTRONICS, INC.

TOLERANCE (DECIMAL) U.O.S.
.x ± .030 .xxx ± .005
.xx ± .015 ANGLES ± 1°

DWN. BY MSE 1-31-86
CHKD MH 9-5-86
ME
PROJ. ENGR. 9-3-86 E. ANTHONY
MFG. PRB 9-3-86

MATERIAL
FINISH
NEXT ASSY.

BROADCAST ELECTRONICS INC.
4100 N. 24TH ST., P.O. BOX 3606 QUINCY, IL 62305 217/224-9600
TELEX 250142 CABLE BROADCAST

TITLE SCHEMATIC, AS10 VCO MODULE

TYPE	SIZE	DWG. NO.	REV
S	B	917-0069	D

MODEL AS10 SCALE ~ SHEET 1 OF 1

USE LOCTITE #609(B.E.#700-0079) TO SECURE (420-6103) SCREW AND (441-0013) STANDOFF TO (471-0479-001) COVER. INVERT COVER AND FILL WITH SYLGARD #184 (B.E.# 700-0027) TO WITHIN .01 OF END OF STANDOFF. MOUNT PCB 517-0069 TO STANDOFF USING WASHER (423-6003) AND SCREW (420-6104). HEAT COMPLETE ASSY. AT 150° F FOR 2 HRS.. AFTER COOLING SPOT SOLDER (▼) DESIGNATED AREA OF PCB TO COVER

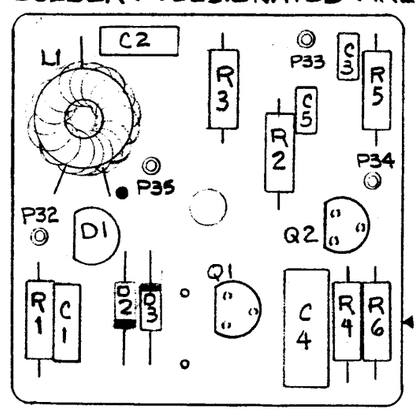

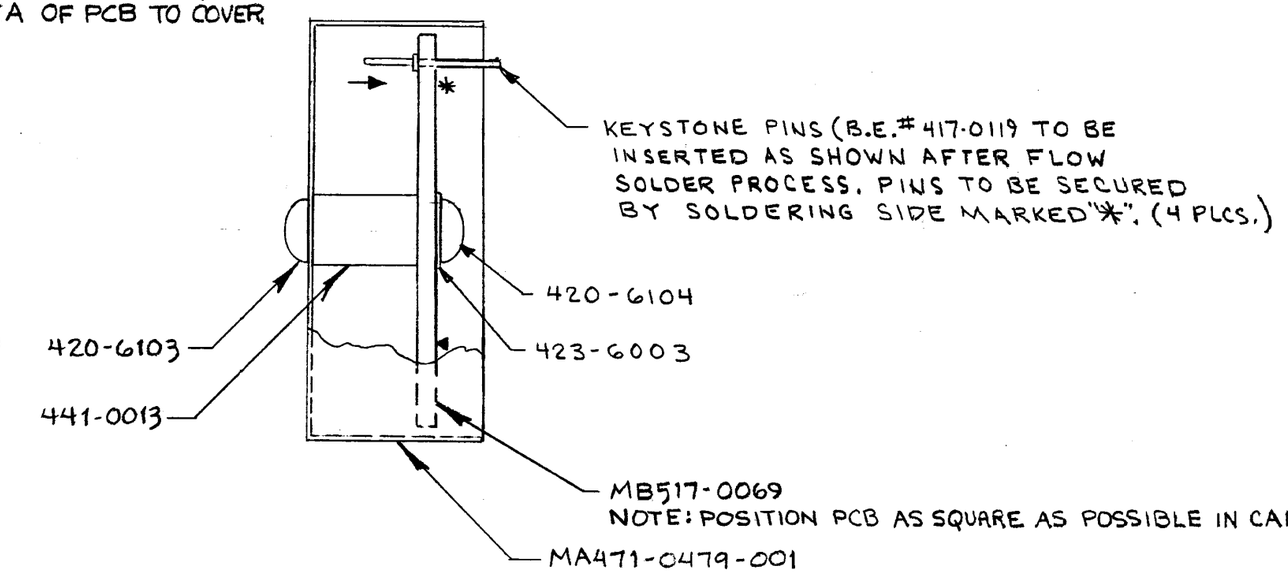

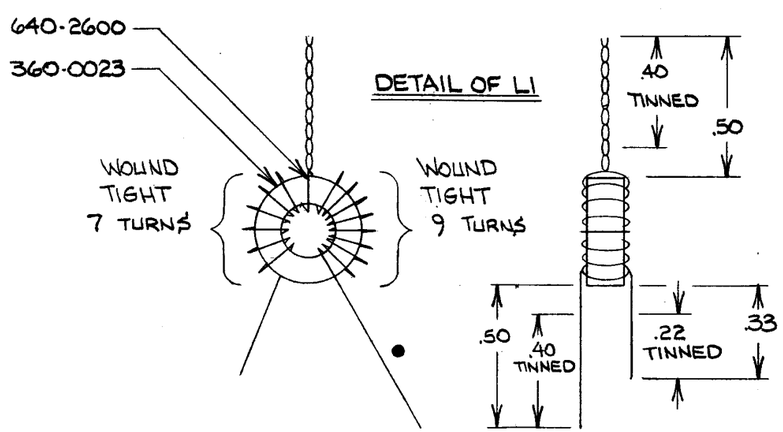

SEE SCHEMATIC # SB 917-0069
SEE B/M # 917-0069

NOTES:

1) TURNS ARE TO BE FLUSH AGAINST INNER RING.
2) TURNS ARE TO BE EVENLY SPACED.
3) TURNS TO BE COUNTED ON THE INSIDE OF TOROID CORE.

COPYRIGHT © 1986 BROADCAST ELECTRONICS, INC.

PROPRIETARY RIGHTS are included in information disclosed herein. This information is submitted in confidence and neither this document nor the information disclosed herein shall be reproduced or transferred to other documents or used or disclosed to others for manufacturing or for any other purpose except as specifically authorized in writing by BROADCAST ELECTRONICS, INC.

TOLERANCE (DECIMAL) U.O.S.
.x ± .030 .xxx ± .005
.xx ± .015 ANGLES ± 1°

DWN. BY MSE 2-3-86	MATERIAL	BROADCAST ELECTRONICS INC.	
CHKD MH 9-5-86		4100 N. 24TH ST., P.O.BOX 3606 QUINCY, IL 62305 217/224-9600 TELEX 250142 CABLE BROADCAST	
ME	FINISH	TITLE PCB ASSY, VCO MODULE	
PROJ. ENGR. 9-3-86 E. ANTHONY		TYPE A / SIZE B / DWG. NO. 917-0069	REV G
MFG. MRB 9-3-86	NEXT ASSY.	MODEL A510 / SCALE 2/1	SHEET 1 OF 1

J	8-31-89	SEE SHEET 4.	KT	JW	10007
K	12-13-90	SEE SHEET 5.	KT	JW	10232
L	8-7-92	SEE SHEET 5.	KT	JW	10688
M	1-27-96	ADD NOTE 6	JTB		11362

REVISIONS

REV	DATE	DESCRIPTION	DFTSMN	ENGR	ECN
A	12-28-90	PROTOTYPE RELEASE	MERK	EJR	----
B	1-31-91	SHT2,SH3,SH4 - CHGD VALUES, J2 TO 6 PIN, ADDED C154,R203	MERK	EJR	----
C	4-19-91	SHT3-CHGD U23,U28;ADD U47,U48,T1,R167 POT AND OTHER COMP'S.	MERK	EJR	----
D	6-27-91	REPLACED SHT 1 WITH 2 NEW SHEETS, ADDED SHEET 5	MERK	EJR	----
E	7-29-91	CHGD VALUES OF R7,R8,R13,R33,R35,R39	JRH	EJR	----
F	11-6-91	ADDED R226-R228,C171-C176 TO SHT4	JRH	EJR	0602
-	11-27-91	ENGINEERING RELERSE W/O CHG	JRH	MBS	---
G	1-14-92	CHGD VALUE OF C129,C130 TO 10uF (SHT 4)	JRH	JW	0688
H	5-18-94	CHGD VALUE OF C165-168 TO 0.01uF (SHT 5)	JLF	JW	9199

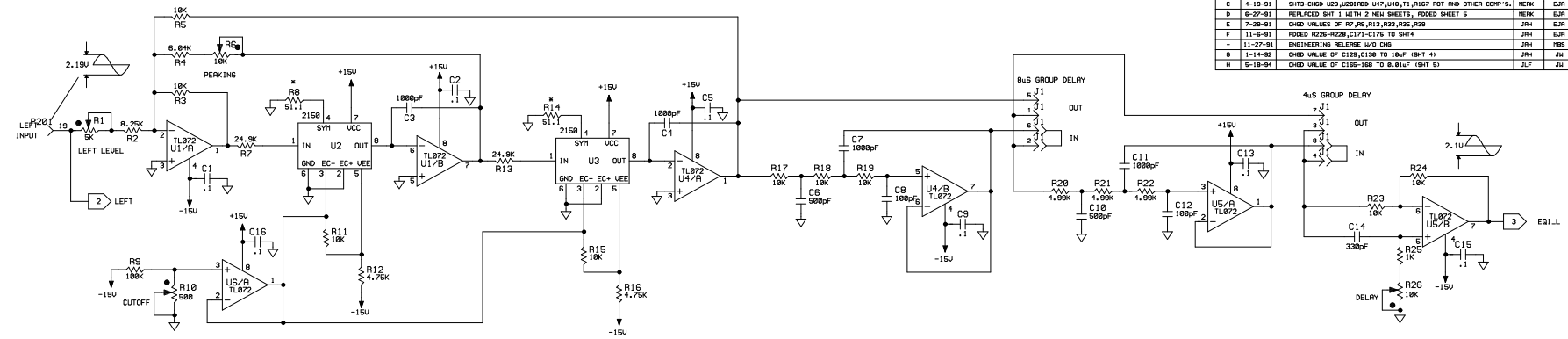

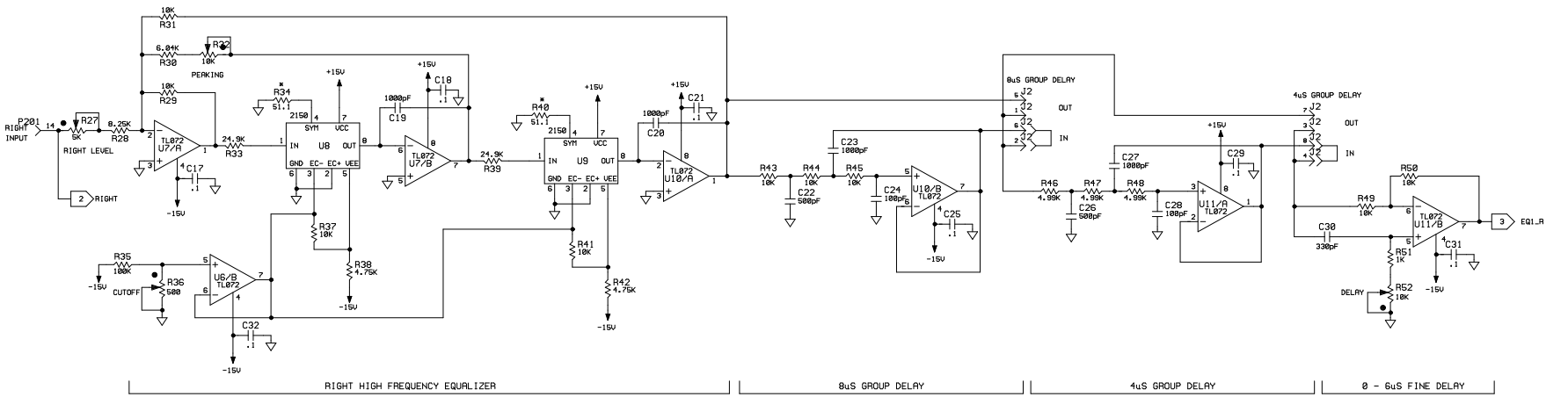

P201 18
P201 43
P201 17
P201 42

EQ1

NOTES:
1. ALL RESISTORS IN OHMS; 1/4W, 5%
   UNLESS OTHERWISE SPECIFIED.
2. LAST COMPONENT USED: R220,C175,U55,L7,T1,D9,TP10,E4,
   S5,J7,P201,Q14,D56
3. COMPONENTS NOT USED: P8 - P200
4. SEE ASSEMBLY: AC917-0209
5. * COMPONENTS NOT USED WITH (220-2181)
   U2,U3,U8,U9,U13,U14,U19,U20

COPYRIGHT © 1991 BROADCAST ELECTRONICS, INC.

COPYRIGHT © 1991 BROADCAST ELECTRONICS, INC.

PROPRIETARY RIGHTS are included in information disclosed herein. This information is submitted in confidence and neither this document nor the information disclosed herein shall be reproduced or transferred to other documents or used or disclosed to others for manufacturing or for any other purpose except as specifically authorized in writing by BROADCAST ELECTRONICS, INC.

TOLERANCE (DECIMAL) U.O.S.
.x ± .030 .xxx ± .005
.xx ± .015 ANGLES ± 1°

DWN. BY MERK 12-28-90
CHKD MH 7-30-91
ME
PROJ. ENGR. EJR 7-30-91
MFG.

MATERIAL SEE B/M 917-0209
FINISH SEE DWG AA652-0000
NEXT ASSY. AC917-0209

BROADCAST ELECTRONICS INC.
4100 N. 24TH ST., P.O.BOX 3686 QUINCY, IL. 62305 217/224-9600
TELEX 250142 CABLE BROADCAST FAX 217/224-9607

TITLE SCHEMATIC- ECU STEREO BOARD

TYPE S SIZE B DWG. NO. 917-0209 REV M

MODEL AM-1 SCALE NONE SHEET 1 OF 5

REVISIONS					
REV	DATE	DESCRIPTION	DFTSMN	ENGR	ECN
D	6-27-91	THIS SHEET ADDED AS SHEET 2	MERK	EJA	----
E	7-29-91	CHGD VALUES OF R68,R61,R65,R85,R87,R81	JAH	EJA	----
M	1-27-96	ADD NOTE 5	JTB		11392

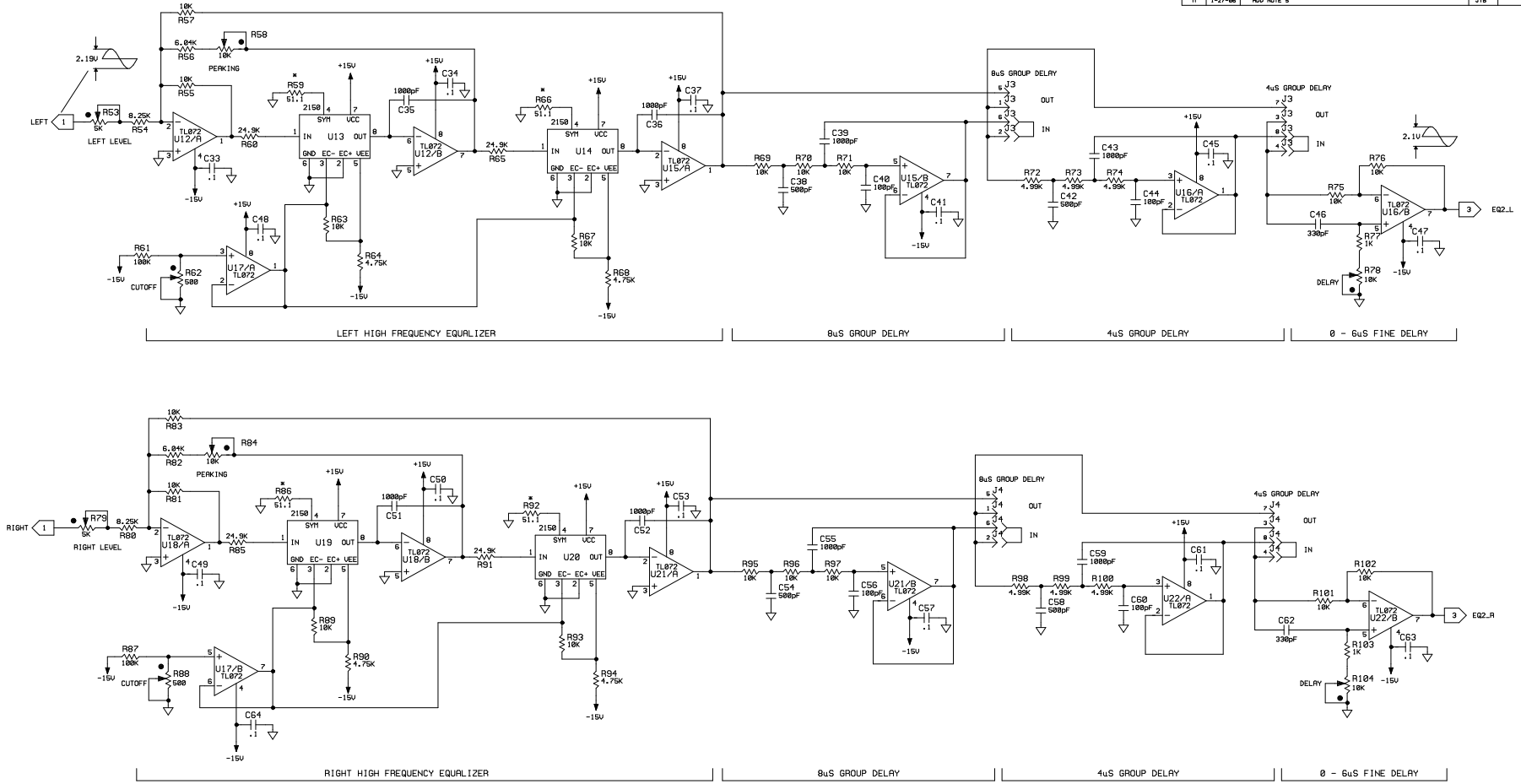

EQ2

COPYRIGHT © 1991 BROADCAST ELECTRONICS, INC.

PROPRIETARY RIGHTS are included in information disclosed herein. This information is submitted in confidence and neither this document nor the information disclosed herein shall be reproduced or transferred to other documents or used or disclosed to others for manufacturing or for any other purpose except as specifically authorized in writing by BROADCAST ELECTRONICS, INC.

TOLERANCE (DECIMAL) U.O.S.
.x ± .030 .xxx ± .005
.xx ± .015 ANGLES ± 1°

DWN. BY MERK 12-20-90
CHKD MH 7-30-91
ME
PROJ. ENGR. EJA 7-30-91
MFG.

MATERIAL SEE B/M 917-0209
FINISH SEE DWG AR602-0000
NEXT ASSY. AC917-0209

BROADCAST ELECTRONICS INC.
4100 N. 24TH ST., P.O.BOX 3606 QUINCY, IL. 62305 217/224-9600
TELEX 250142 CABLE BROADCAST FAX 217/224-9607

TITLE SCHEMATIC- ECU STEREO BOARD

TYPE S SIZE B DWG. NO. 917-0209 REV M

MODEL AM-1 SCALE NONE SHEET 2 OF 5

REVISIONS					
REV	DATE	DESCRIPTION	DFTSMN	ENGR	ECN
A	12-28-90	PROTOTYPE RELEASE	MERK	EJR	----
B	1-31-91	CHGD VALUE OF R93,R91,R107,R110; ADDED C164,R203	MERK	EJR	----
D	6-27-91	CHGD INPUTS TO U14 & U15; REMOVED R79 & R87; ADD L5 & L6	MERK	EJR	----
E	7-29-91	ADDED C169,C170 CHGD VALUE OF R128,R130	JRH	EJR	----
M	1-27-06	ADD NOTE 5	JTB		11392

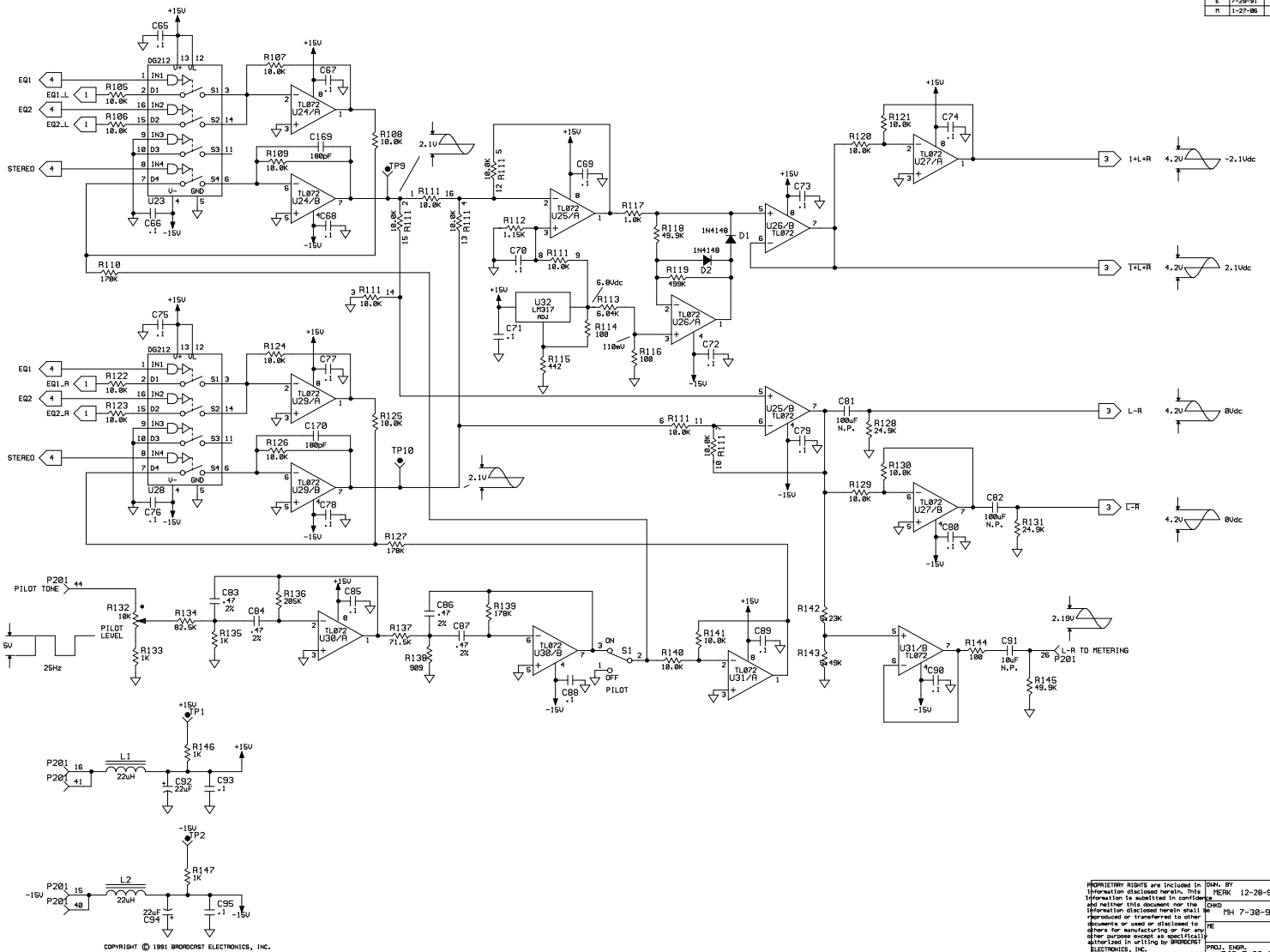

COPYRIGHT © 1991 BROADCAST ELECTRONICS, INC.

PROPRIETARY RIGHTS are included in information disclosed herein. This information is submitted in confidence and neither this document nor the information disclosed herein shall be reproduced or transferred to other documents or used or disclosed to others for manufacturing or for any other purpose except as specifically authorized in writing by BROADCAST ELECTRONICS, INC.

TOLERANCE (DECIMAL) U.O.S.
.X ± .030 .XXX ± .005
.XX ± .015 ANGLES ± 1°

DWN. BY MERK 12-28-90
CHKD MH 7-30-91
ME
PROJ. ENGR. EJR 7-30-91
MFG.

MATERIAL SEE B/M 917-0209
FINISH SEE DWG AA692-0000
NEXT ASSY. AC917-0209

BROADCAST ELECTRONICS INC.
4100 N. 24TH ST., P.O.BOX 3686 QUINCY, IL. 62305 217/224-9600
TELEX 250142 CABLE BROADCAST FAX 217/224-9607

TITLE SCHEMATIC- ECU STEREO BOARD

TYPE	SIZE	DWG. NO.	REV
S	B	917-0209	M

MODEL AM-1 SCALE NONE SHEET 3 OF 5

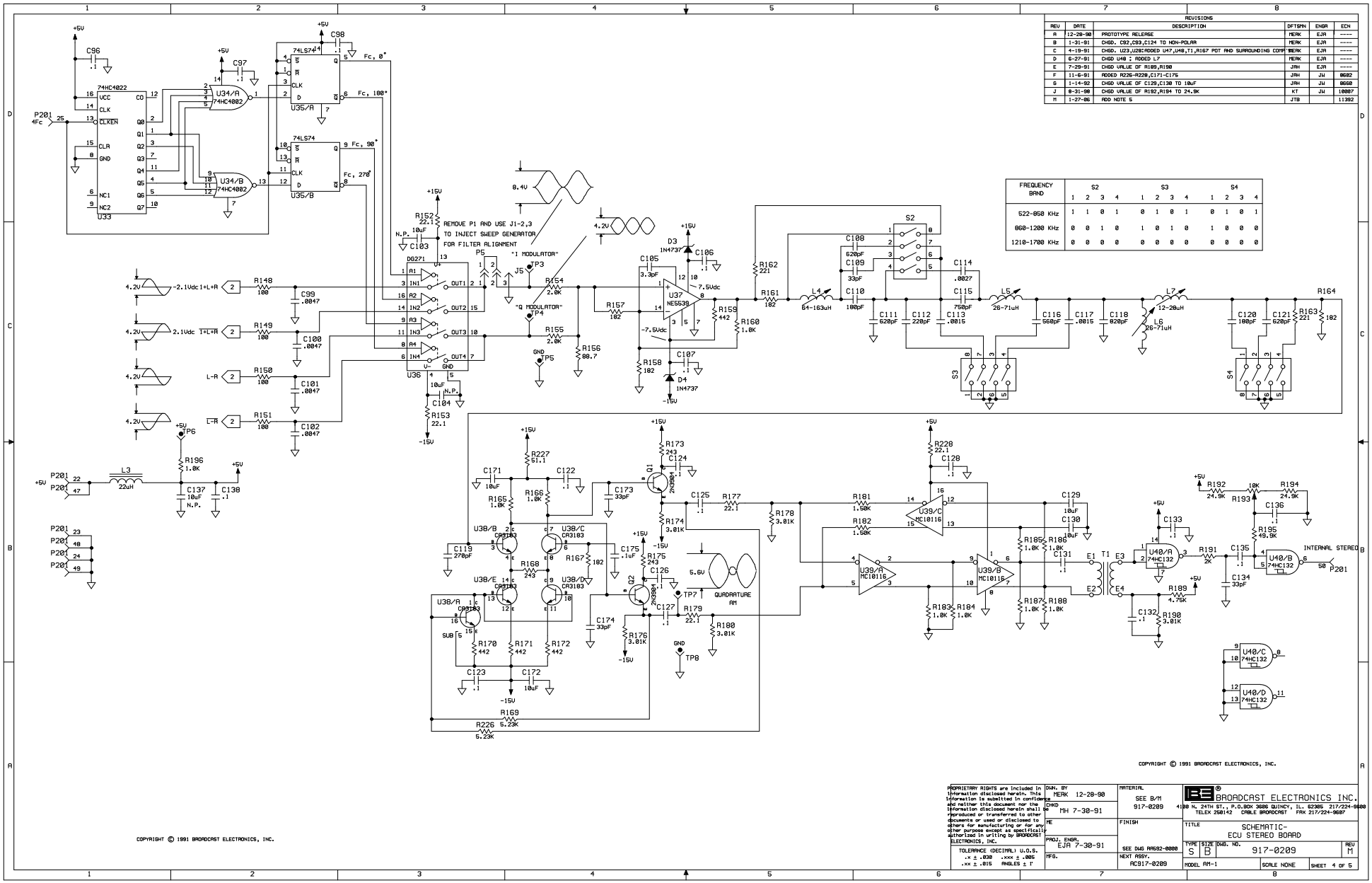

REVISIONS					
REV	DATE	DESCRIPTION	DFTSMN	ENGR	ECN
A	12-28-90	PROTOTYPE RELEASE	MERK	EJR	----
B	1-31-91	CHGD. C92,C93,C124 TO NON-POLAR	MERK	EJR	----
C	4-19-91	CHGD. U23,U28;ADDED U47,U48,T1,R167 POT AND SURROUNDING COMP	MERK	EJR	----
D	6-27-91	CHGD U40 ; ADDED L7	MERK	EJR	----
E	7-29-91	CHGD VALUE OF R189,R190	JRH	EJR	----
F	11-6-91	ADDED R226-R228,C171-C175	JRH	JH	8682
G	1-14-92	CHGD VALUE OF C129,C130 TO 10uF	JRH	JH	8968
J	8-31-96	CHGD VALUE OF R192,R194 TO 24.9K	KT	JH	10807
M	1-27-96	ADD NOTE 5	JTB		11392

FREQUENCY BAND	S2				S3				S4			
	1	2	3	4	1	2	3	4	1	2	3	4
522-860 KHz	1	1	0	1	0	1	0	1	0	1	0	1
860-1200 KHz	0	0	1	0	1	0	1	0	1	0	0	0
1210-1700 KHz	0	0	0	0	0	0	0	0	0	0	0	0

COPYRIGHT © 1991 BROADCAST ELECTRONICS, INC.

COPYRIGHT © 1991 BROADCAST ELECTRONICS, INC.

PROPRIETARY RIGHTS are included in information disclosed herein. This information is submitted in confidence and neither this document nor the information disclosed herein shall be reproduced or transferred to other documents or used or disclosed to others for manufacturing or for any other purpose except as specifically authorized in writing by BROADCAST ELECTRONICS, INC.

TOLERANCE (DECIMAL) U.O.S.
.X ± .030 .XXX ± .005
.XX ± .015 ANGLES ± 1°

DWN. BY MERK 12-28-90
CHKD MH 7-30-91
ME
PROJ. ENGR. EJR 7-30-91
MFG.

MATERIAL SEE B/M 917-0209
FINISH SEE DWG AA692-0000
NEXT ASSY. AC917-0209

BROADCAST ELECTRONICS INC.
4100 N. 24TH ST., P.O.BOX 3686 QUINCY, IL. 62305 217/224-9600
TELEX 250142 CABLE BROADCAST FAX 217/224-9607

TITLE SCHEMATIC- ECU STEREO BOARD

TYPE S SIZE B DWG. NO. 917-0209 REV M

MODEL AM-1 SCALE NONE SHEET 4 OF 5

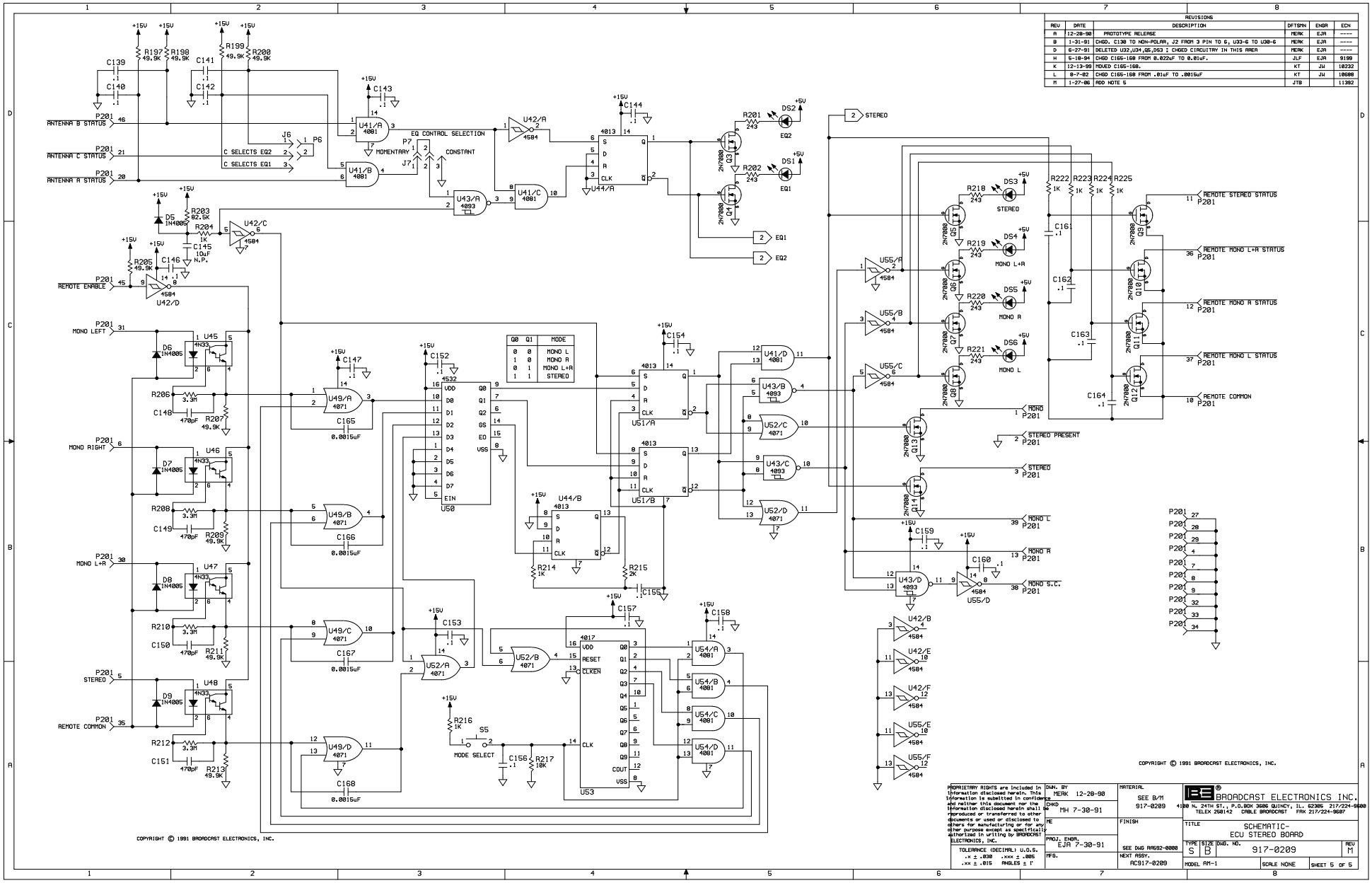

Q0	Q1	MODE
0	0	MONO L
1	0	MONO R
0	1	MONO L+R
1	1	STEREO

REVISIONS					
REV	DATE	DESCRIPTION	DFTSMN	ENGR	ECN
A	12-20-90	PROTOTYPE RELEASE	MERK	EJA	----
B	1-31-91	CHGD. C130 TO NON-POLAR, J2 FROM 3 PIN TO 6, U33-6 TO U30-6	MERK	EJA	----
D	6-27-91	DELETED U32,U34,Q5,DS3 ; CHGED CIRCUITRY IN THIS AREA	MERK	EJA	----
H	6-10-94	CHGD C165-168 FROM 0.022uF TO 0.01uF.	JLF	EJA	9199
K	12-13-99	MOVED C165-168.	KT	JW	10232
L	8-7-02	CHGD C165-168 FROM .01uF TO .0015uF	KT	JW	10680
M	1-27-06	ADD NOTE 5	JTB		11302

COPYRIGHT © 1991 BROADCAST ELECTRONICS, INC.

PROPRIETARY RIGHTS are included in information disclosed herein. This information is submitted in confidence and neither this document nor the information disclosed herein shall be reproduced or transferred to other documents or used or disclosed to others for manufacturing or for any other purpose except as specifically authorized in writing by BROADCAST ELECTRONICS, INC.

TOLERANCE (DECIMAL) U.O.S.
.X ± .030 .XXX ± .005
.XX ± .015 ANGLES ± 1°

DWN. BY MERK 12-20-90
CHKD MH 7-30-91
ME
PROJ. ENGR. EJA 7-30-91
MFG.

MATERIAL SEE B/M 917-0209
FINISH SEE DWG RA692-0000
NEXT ASSY. AC917-0209

BROADCAST ELECTRONICS INC.
4100 N. 24TH ST., P.O.BOX 3686 QUINCY, IL. 62305 217/224-9600
TELEX 250142 CABLE BROADCAST FAX 217/224-9607

TITLE SCHEMATIC- ECU STEREO BOARD

TYPE	SIZE	DWG. NO.	REV
S	B	917-0209	M

MODEL AM-1 SCALE NONE SHEET 5 OF 5

J	5-18-94	CHGD VALUE OF C165-168 FROM 0.022uF TO 0.01uF.	JLF	JW	9199
K	8-5-94	ADDED DETAIL A.	MH	JW	9243
L	5-26-95	CHANGED T1 REFERENCE NUMBER FROM 370-0049 TO 370-0046.	AEB	JW	9290
M	3-26-97	320-0030 WAS 4 PLCS	MSE	JW	9739
N	8-31-98	CHGD R192 & R194 TO 103-2495.	KT	JW	10007
P	12-12-99	CHGD NETS FOR PIN 2 OF C165-C168.	KT	JW	10232
R	8-7-02	CHGD C165-C168 FROM 030-1043 TO 003-1523	KT	JW	10688
T	9-18-02	FIXED SILKSCREEN FOR U50	KT	JW	10780
U	1-27-06	ADD NOTE 4	JTB		11392

REVISIONS

REV	DATE	DESCRIPTION	DFTSMN	ENGR	ECN
A	12-28-90	PROTOTYPE RELEASE	MERK	EJA	----
B	1-31-90	ADDED R203,C154,343-6331,P2A,P2B,P1: CHGD J2;CHGD SOME VALUES	MERK	EJA	----
C	5-2-91	ADD U47,U48,T1,R167 POT & OTHER COMP'S	MERK	EJA	----
D	6-27-91	REDESIGN	MERK	EJA	----
-	7-19-91	ENGINEERING RELEASE	JAH	EJA	----
E	7-29-91	ADDED C169,C170	JAH	EJA	----
-	9-10-91	REMOVED COIL ASSEMBLIES	JAH	EJA	----
F	11-8-91	ADDED C171-C175,R226-R228,370-0049,400-2175	JAH	JW	8602
G	1-15-92	CHGD VALUE OF C129,C130 TO 10uF	JAH	JW	8660
H	9-20-93	C1,C2,C5,C9,C13,C15-C18,C21,C25,C29,C31-C34,C37,C41,C45,C47-C50,C53,C57,C61,C63-C80,C85,C88-C90,C93,C95-C98,C106,C107,C122-C128,C131-C133,C135,C136,C138-C144,C146,C147,C152-C164 & C175 CHGD TO 003-1066.	MH	MBS	9051

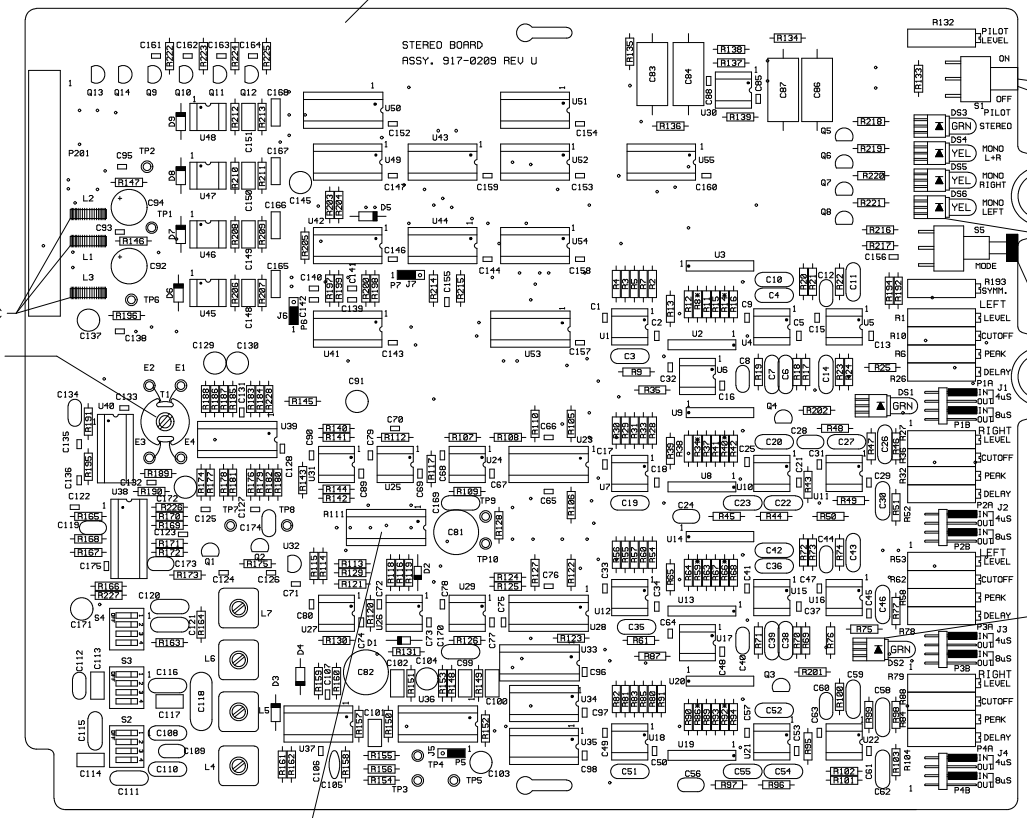

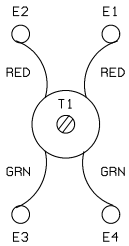

DO NOT CROSS LEADS
WHEN WIRING.
TIN WIRES BEFORE WRAPPING.

DETAIL A

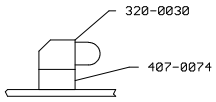

DETAIL C
(DS1 & DS2)

NOTE:

1. TRIM ALL COMPONENT LEADS ON SOLDER SIDE TO .10 MAX.
2. SEE SCHEMATIC SD917-0209.
3. R111 TO BE MOUNTED W/O SOCKET.
4. * COMPONENTS NOT USED WITH (220-2181) U2,U3,U8,U9,U13,U14,U19,U20

COPYRIGHT © 1991 BROADCAST ELECTRONICS, INC.

PROPRIETARY RIGHTS are included in information disclosed herein. This information is submitted in confidence and neither this document nor the information disclosed herein shall be reproduced or transferred to other documents or used or disclosed to others for manufacturing or for any other purpose except as specifically authorized in writing by BROADCAST ELECTRONICS, INC.

TOLERANCE (DECIMAL) U.O.S.
.X ± .030 .XXX ± .005
.XX ± .015 ANGLES ± 1°

DWN. BY MERK 12-28-90
CHKD MH 7-30-91
ME
PROJ. ENGR. EJA 7-30-91
MFG.

MATERIAL SEE B/M 917-0209
FINISH SEE DWG RA592-0000
NEXT ASSY.

BROADCAST ELECTRONICS INC.
4100 N.24TH ST. P.O.BOX 3606 QUINCY,IL. 62305 PH. 217/224-9600
TELEX 250142 CABLE BROADCAST FAX 217/224-9607

TITLE PCB ASSEMBLY- ECU STEREO BOARD

TYPE	SIZE	DWG No.	REV
A	C	917-0209	U

MODEL AM-1 SCALE NONE SHEET 1 OF 1

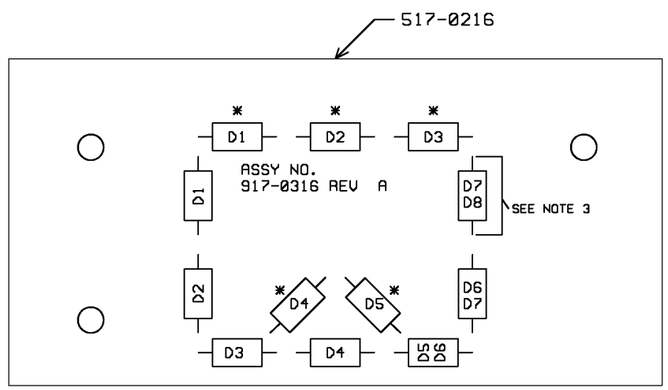

NOTES:

1. * - INDICATES COMPONENTS NOT USED ON 917-0316 (AM-1A).
2. SEE SCHEMATIC SB 907-1000-001 (AM-1A).
3. FOR 917-0316 A JUMPER (601-0018, 18 GAUGE BUS WIRE) REPLACES D7/D8.

COPYRIGHT © 1996 BROADCAST ELECTRONICS, INC.

PROPRIETARY RIGHTS are included in information disclosed herein. This information is submitted in confidence and neither this document nor the information disclosed herein shall be reproduced or transferred to other documents or used or disclosed to others for manufacturing or for any other purpose except as specifically authorized in writing by BROADCAST ELECTRONICS, INC.

TOLERANCE (DECIMAL) U.O.S.
.X ± .030 .XXX ± .005
.XX ± .015 ANGLES + 1°

DWN. BY 4-29-96
M. HAYDEN
CHKD
ME
PROJ. ENGR. 4-29-96
JERRY WESTBERG
MFG.

MATERIAL
SEE B/M'S
917-0316
FINISH
~~SEE DWG RA592-0000~~
NEXT ASSY.
907-1000-001

BROADCAST ELECTRONICS INC.
4100 N.24TH ST. P.O.BOX 3606 QUINCY,IL. 62305 PH. 217/224-9600
TELEX 250142 CABLE BROADCAST FAX 217/224-9607

TITLE PCB ASSEMBLY
LIGHTNING PROTECTION BD.

TYPE	SIZE	DWG No.	REV
A	B	917-0316	A

MODEL AM-1A SCALE 1/1 SHEET 1 OF 1

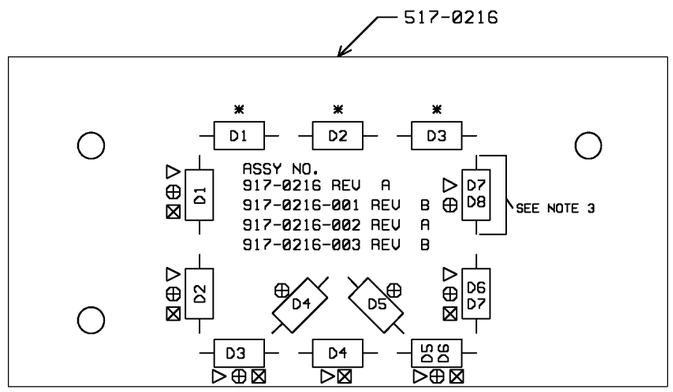

NOTES:

1. ✱ - INDICATES COMPONENTS USED ON 917-0216 (AM-1).
   ▷ - INDICATES COMPONENTS USED ON 917-0216-001 (AM-5).
   ⊕ - INDICATES COMPONENTS USED ON 917-0216-002 (AM-10).
   ⊠ - INDICATES COMPONENTS USED ON 917-0216-003 (AM-2.5).
2. SEE SCHEMATIC SB 957-0008 (AM-1).
   SEE SCHEMATIC SB 957-0024 (AM-2.5).
   SEE SCHEMATIC SB 957-0017 (AM-5).
   SEE SCHEMATIC SB 957-0020 (AM-10).
3. FOR 917-0216-003 A JUMPER (601-0018, 18 GAUGE BUS WIRE) REPLACES D7/D8.

COPYRIGHT © 1992 BROADCAST ELECTRONICS, INC.

PROPRIETARY RIGHTS are included in information disclosed herein. This information is submitted in confidence and neither this document nor the information disclosed herein shall be reproduced or transferred to other documents or used or disclosed to others for manufacturing or for any other purpose except as specifically authorized in writing by BROADCAST ELECTRONICS, INC.

TOLERANCE (DECIMAL) U.O.S.
.X ± .030 .XXX ± .005
.XX ± .015 ANGLES ± 1°

DWN. BY 6-30-92
M. HAYDEN
CHKD
ME
PROJ. ENGR. 12-17-92
JERRY WESTBERG
MFG.

MATERIAL
SEE B/M'S
917-0216/-001
917-0216-002
917-0216-003

FINISH
~~SEE DWG RA592-0000~~

NEXT ASSY.
957-0008/0017
957-0020/0024

BROADCAST ELECTRONICS INC.
4100 N.24TH ST. P.O.BOX 3606 QUINCY,IL. 62305 PH. 217/224-9600
TELEX 250142 CABLE BROADCAST FAX 217/224-9607

TITLE
PCB ASSEMBLY
LIGHTNING PROTECTION BD.

TYPE	SIZE	DWG No.	REV
A	B	917-0216/-001/-002/-003	C

MODEL AM-1/2.5/5/10 SCALE 1/1 SHEET 1 OF 1

COPYRIGHT © 1996 BROADCAST ELECTRONICS, INC.

REVISIONS					
REV	DATE	DESCRIPTION	DRAFTER	APPROVED	ECN
E	12-17-97	ADDED 693-0090.	KT	JW	9914
F	2-19-98	ADDED 471-5124, 4 PLCS ON 0321 & 0321-006 ONLY DEL -0501	MSE	JW	9924
G	1-18-99	TOOK -006 OFF OF NOTE 2.	KT	JW	10079
H	7-16-99	ADDED -002,-005 AND NOTE 3.	KT	JW	10165
J	1-27-00	ADDED NOTE TO DRESS WHITE WIRE UNDER LITZ WIRE.	KT	JW	10256

REVISIONS					
REV	DATE	DESCRIPTION	DRAFTER	APPROVED	ECN
1	12-15-95	PROTOTYPE RELEASE.	MH	JW	----
A	8-15-96	UPDATED ASSY NOTES;CORRECTED WIRE LABELING FOR T3; ENGINEERING RELEASE.	MH	JW	----
B	3-7-97	ADD L6 AND (4) .25 HOLES, (4) 407-0119, (4) 402-0001	MSE	JW	9781
C	5-2-97	MOVED L9 & 3 407-0119 & 402-0001 PARTS.	KT	JW	9795
D	10-17-97	ADDED -501 AND NOTES.	KT	JW	9878

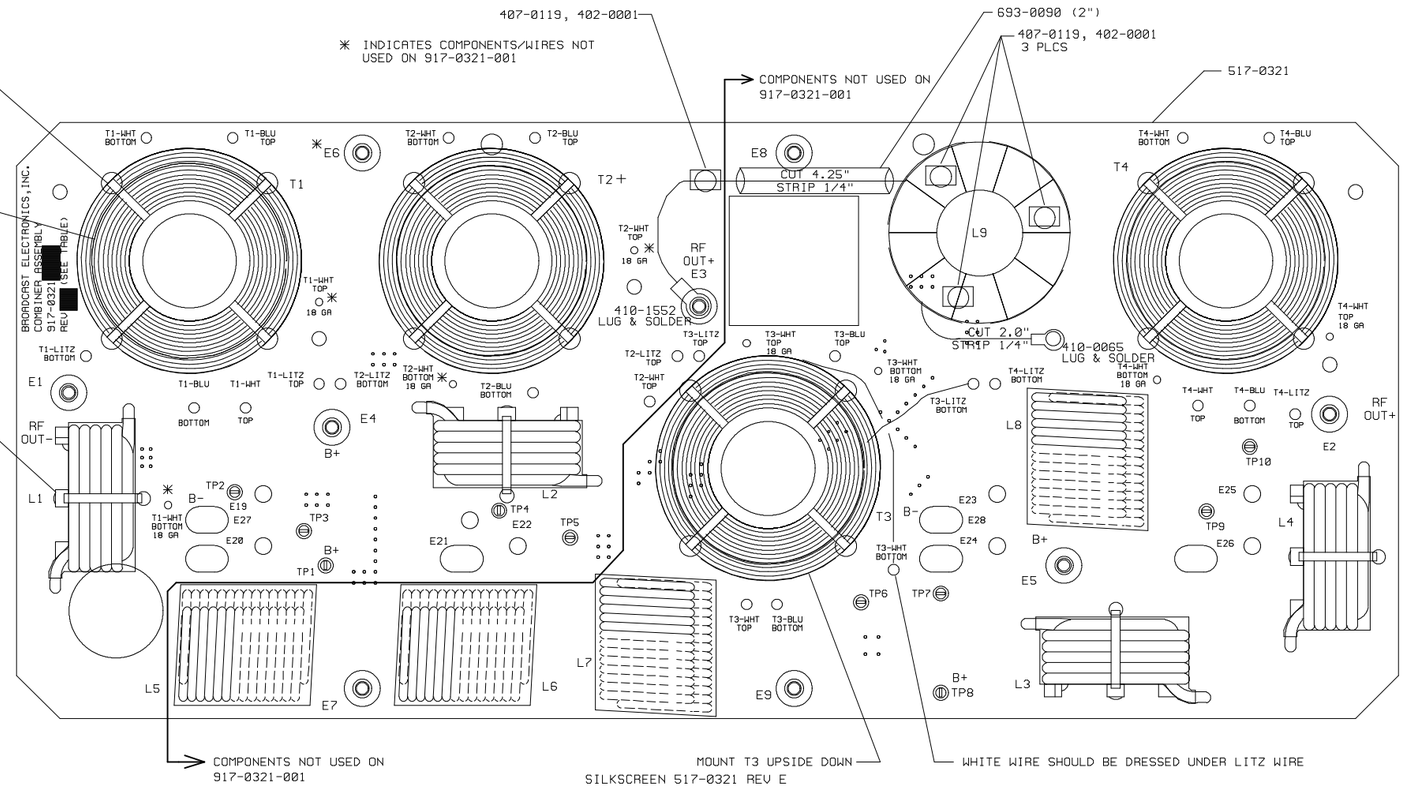

SILKSCREEN 517-0321 REV E

NOTES:

1. SEE SCHEMATIC SB917-0303/-001.
2. INSTALL L9 ON 1301-1580 KHz & 1581-1700KHz, AM-10A, ON 917-0321 ONLY.
3. LITZ WIRE TOP & BOTTOM REVERSED FOR 917-0321-002.

REVISION CHART	
REV	PCB DRAWING NO.
J	917-0321
J	917-0321-001
J	917-0321-002
J	917-0321-005
J	917-0321-006

COPYRIGHT © 1996 BROADCAST ELECTRONICS, INC.

PROPRIETARY RIGHTS are included in information disclosed herein. This information is submitted in confidence and neither this document nor the information disclosed herein shall be reproduced or transferred to other documents or used or disclosed to others for manufacturing or for any other purpose except as specifically authorized in writing by BROADCAST ELECTRONICS, INC.

TOLERANCE (DECIMAL) U.O.S.
.X ± .030 .XXX ± .005
.XX ± .015 ANGLES ± 1°

DWN. BY 12-15-95 M. HAYDEN
DESIGNER(S)
PROJ. LEADER JW 8-15-96
MFG.

MATERIAL SEE BOM 917-0321 917-0321-001 917-0321-006
FINISH
NEXT ASSY.

BROADCAST ELECTRONICS INC.
4100 N. 24TH ST. P.O.BOX 3606 QUINCY,IL. 62305
217/224-9600 FAX 217/224-9607

TITLE PCB ASSEMBLY COMBINER

TYPE	SIZE	DWG No.	REV
A	C	917-0321/-006 917-0321-001/002/005	J

MODEL AM-1A SCALE 1/1 SHEET 1 OF 1